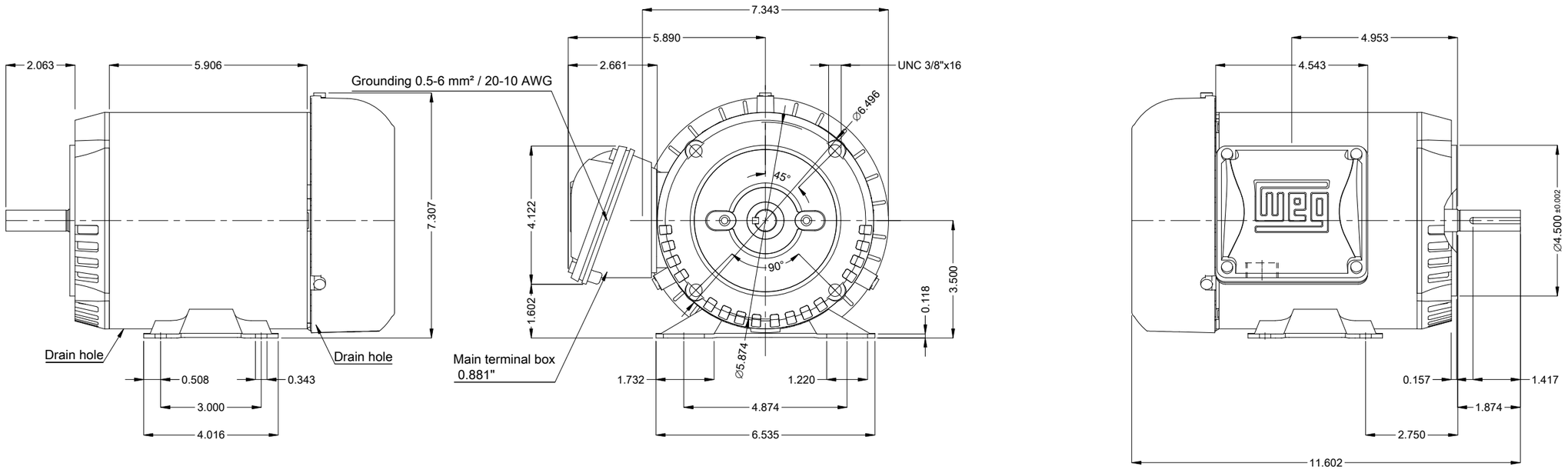

Fan cover - steel plate
Color Munsell N 1 matte black
Painting plan 207N
Mounting MARKET F-1/B34R(D)
Mounting B34D

DE Shaft End

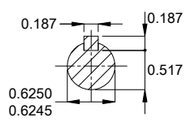

0.5 HP 02 Poles 60 Hz

A

Scale 2 : 7

ECM	LOC	SUMMARY OF MODIFICATIONS	EXECUTED	CHECKED	RELEASED	DATE	VER
			HYBRISUSER				00

EXECUTED	HYBRISUSER
CHECKED	
RELEASED	
REL. DATE	

THREE PH. MOTOR ROLLED STEEL
FRAME 56C IP55 TEFC

PREVIEW

WDD 00

SHEET 1 / 1

Dimensions in inches

A3

WEG's property. Forbidden reproduction without previous authorization.