THIS IS AN UPDATED REVISION. THE PREVIOUS ONE MUST BE DISREGARDED.

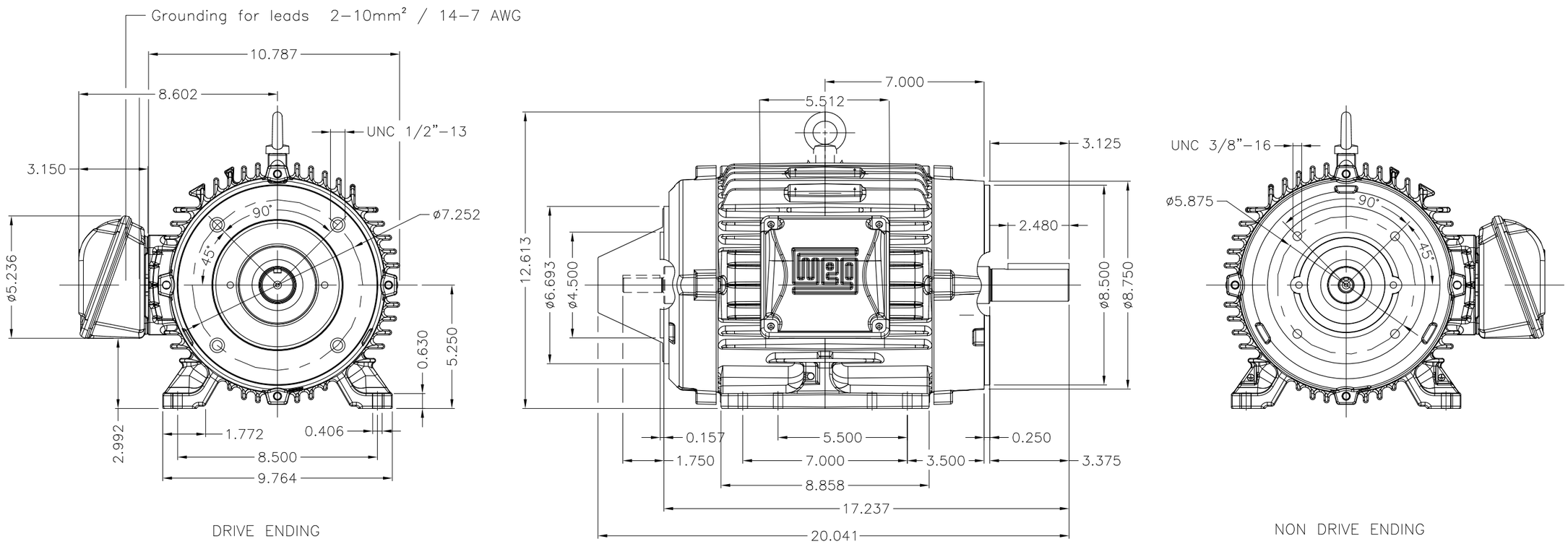

Design A
Without fan
Bearing cap
Thermal protection to switch off - thermostat 155°C
Without fan cover
Motor with centralized stack, special stack length
Color RAL 5009
Painting plan 207A
Service factor 1.0
Mounting NEMA F-1
Mounting B34R(D)

DE Shaft End

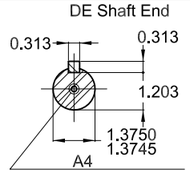

NDE Shaft End

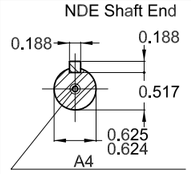

10 HP 04 Poles 60 Hz | A

WEG ELECTRIC CORPORATION - WEC

ECM	LOC	SUMMARY OF MODIFICATIONS	EXECUTED	CHECKED	RELEASED	DATE	VER
		419050483	MIRIAMPM	AZUE	CALDERAV	16.12.2021	01

EXECUTED	MIRIAMPM	THREE PH. MOTOR W22 PREM. EFF.	1240812963
CHECKED	AZUE	FRAME 213/5TCZ IP55 TENV	WDD 01
RELEASED	CALDERAV		
REL DT.	16.12.2021	WMO Jaragua do Sul Product Engineering	SHEET 1 / 1

PRELIMINARY DOCUMENT - Not to be used for installation purposes.

Dimensions in inches

XME A3

WEG's property. Forbidden reproduction without previous authorization.

10009265617-01