031623

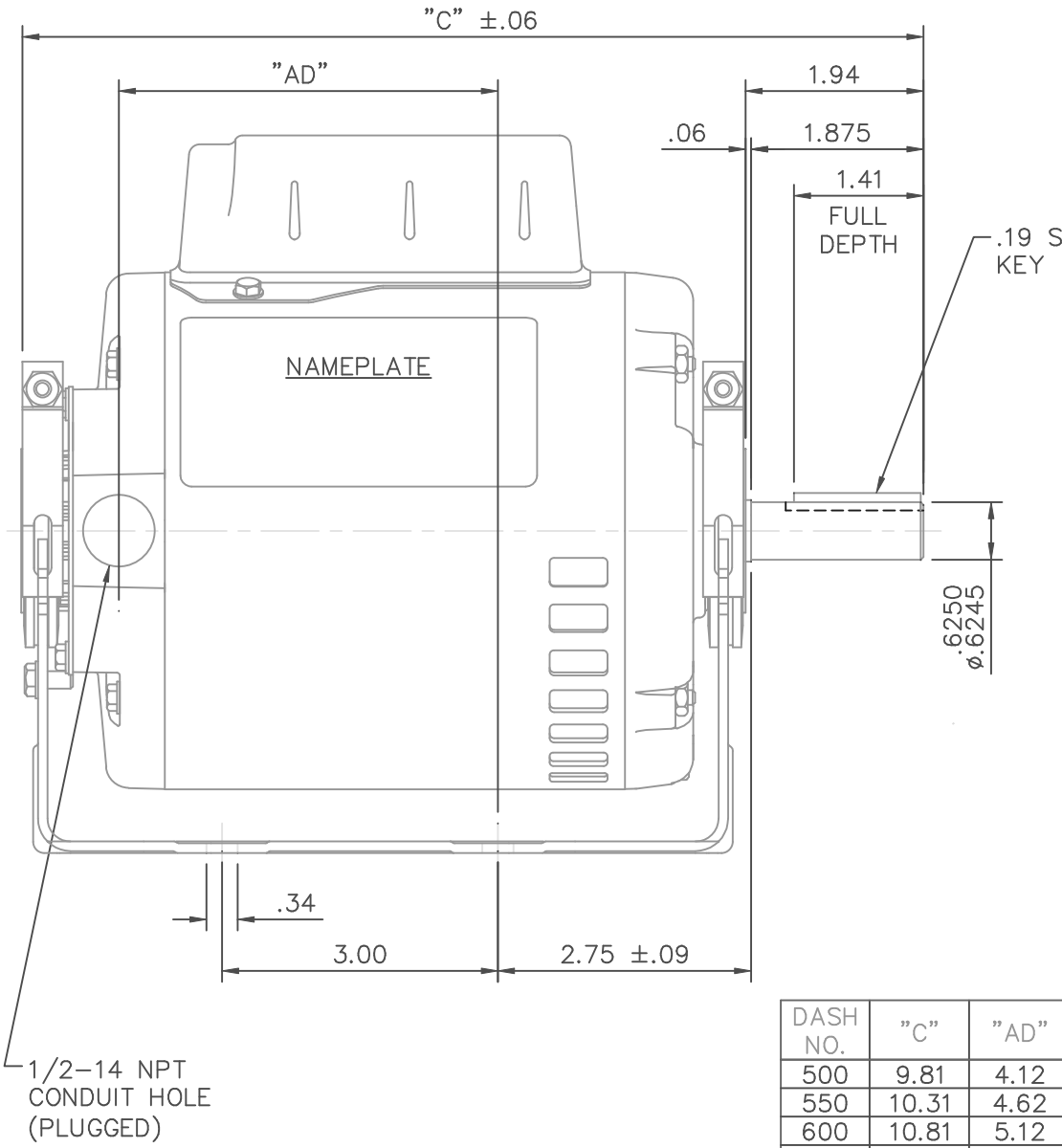

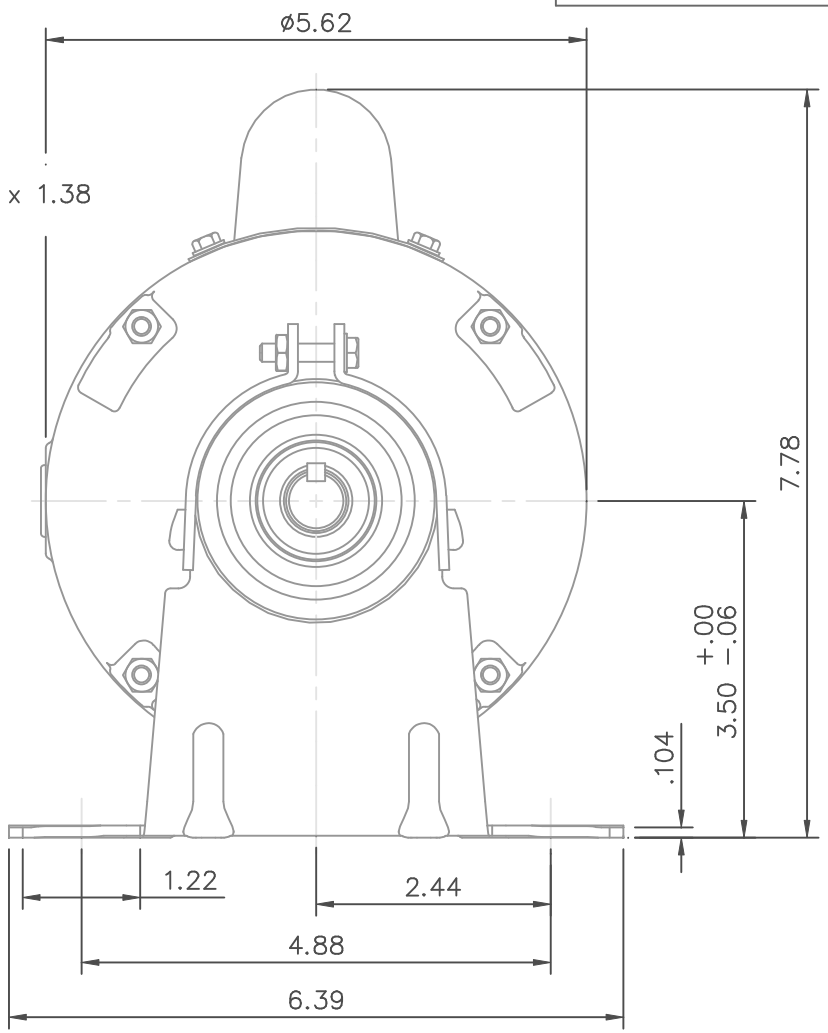

DASH NO.	"C"	"AD"
500	9.81	4.12
550	10.31	4.62
600	10.81	5.12
650	11.31	5.62

NO.	REVISION	BY & DATE	CH'K'D.

TOLERANCES UNLESS OTHERWISE SPECIFIED

DEC.	INCHES	METRIC
.X	±.1	±2.5
.XX	±.03	±.76
.XXX	±.005	±.127
.XXXX	±.0005	±.0127
FRACTIONS	±1/64	
ANGLES	±1/2°	

LEESON ELECTRIC CORPORATION

DRAWN	PG 5/24/01	TITLE	OUTLINE – S56 FRAME RESILIENT MOUNT – DRIP PROOF
APPR.			
R.F.P.		MAT'L.	1 PHASE
SCALE	1=2		
REF.	030485	FINISH	
FMF	101611	REV.	
		DRAWING NO.	031623

THIS DRAWING IN DESIGN AND DETAIL IS OUR PROPERTY AND MUST NOT BE USED EXCEPT IN CONNECTION WITH OUR WORK ALL RIGHTS OF DESIGN AND INVENTION ARE RESERVED
THIS IS AN ELECTRONICALLY GENERATED DOCUMENT – DO NOT SCALE THIS PRINT

9/26/2008 1:05:33 PM