Uncontrolled Copy

031628

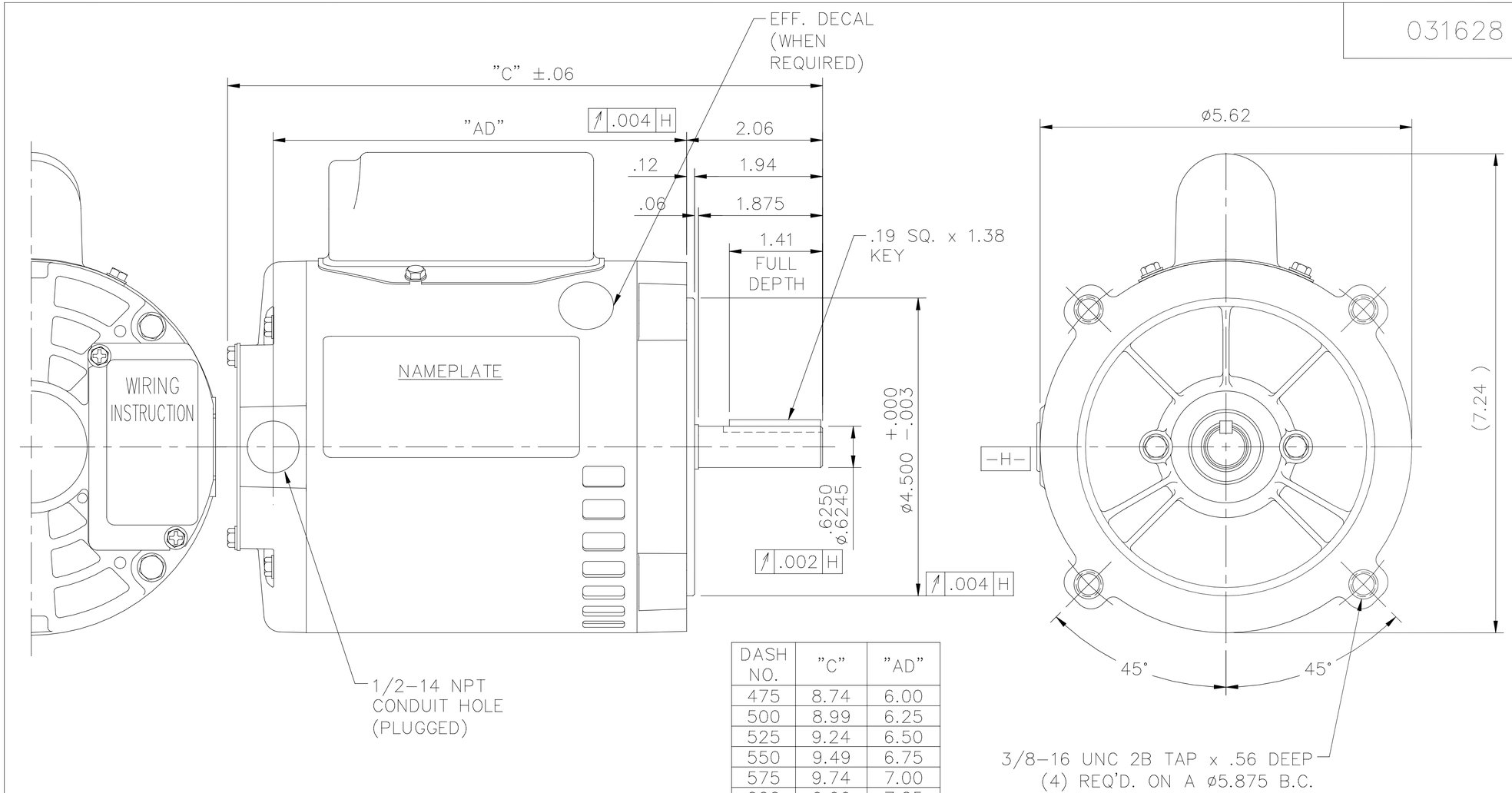

DASH NO.	"C"	"AD"
475	8.74	6.00
500	8.99	6.25
525	9.24	6.50
550	9.49	6.75
575	9.74	7.00
600	9.99	7.25
625	10.24	7.50
650	10.49	7.75
675	10.74	8.00
700	10.99	8.25

NO.	REVISION	BY & DATE	CHK
02	UPDATED WITH CAP BOX AND DECAL	SL 10/01/15	JD
01	REVISED CALLOUT OF GD&T	KMM 6/6/02	

TOLERANCES UNLESS SPECIFIED	
DEC.	INCHES
.X	±.1
.XX	±.03
.XXX	±.005
.XXXX	±.0005
ANG	±1/2°

LEESON ELECTRIC MOTORS GEARMOTORS AND DRIVES

TITLE: OUTLINE – S56C FRAME "C" FACE MOUNT – DRIP PROOF

MAT'L.: 1 PHASE

FINISH

CAD FILE: 031628

DRAWN	PG 5/24/01
CHK	
APPD	
SCALE	1=2
REF	031070
FMF	100019
PREV	

SIZE: A

DRAWING NO.: 031628

REV.: 02

RFP

DIST

THIS DRAWING IN DESIGN AND DETAIL IS OUR PROPERTY AND MUST NOT BE USED EXCEPT IN CONNECTION WITH OUR WORK ALL RIGHTS OF DESIGN AND INVENTION ARE RESERVED
THIS IS AN ELECTRONICALLY GENERATED DOCUMENT – DO NOT SCALE THIS PRINT