031627

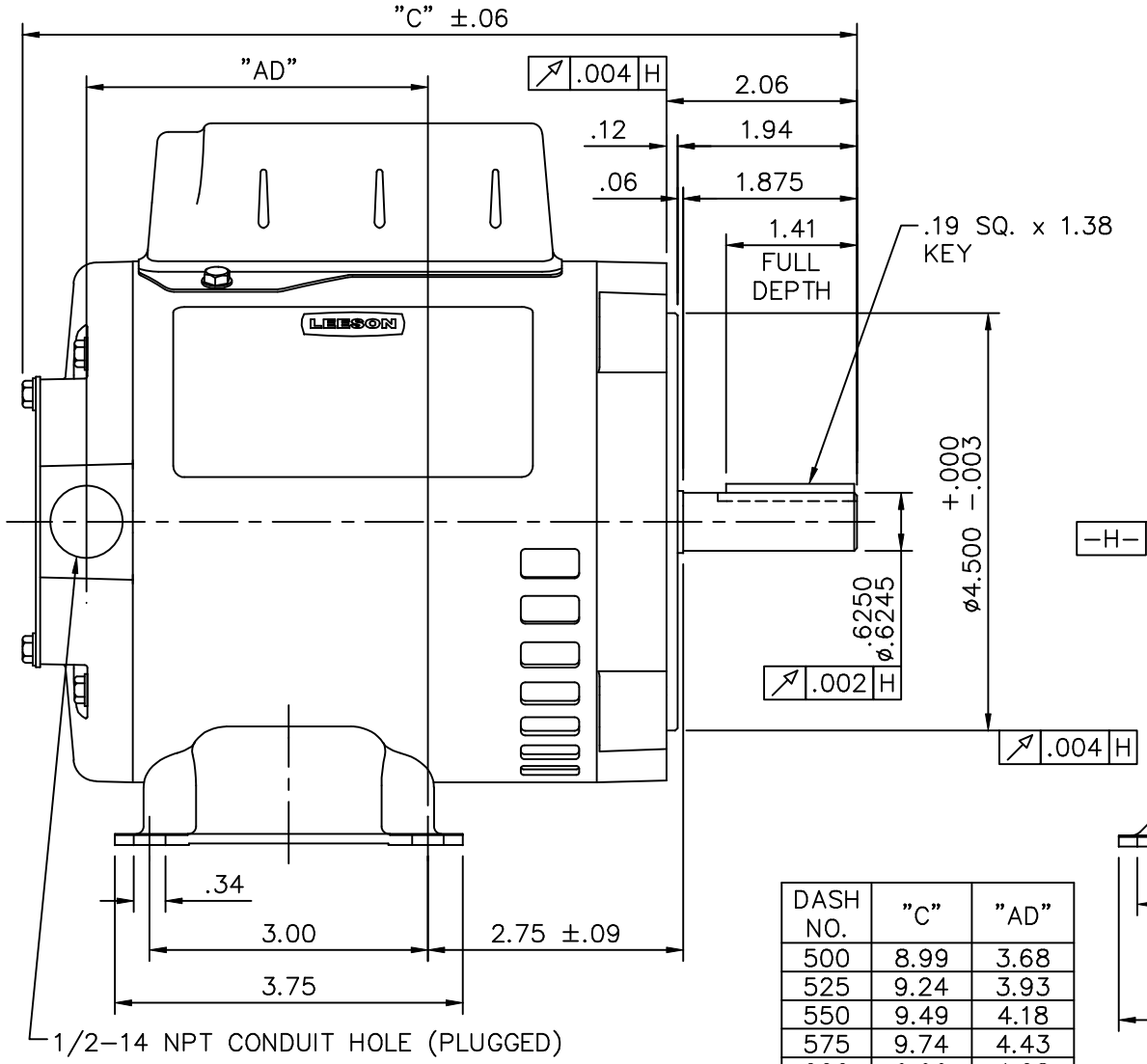

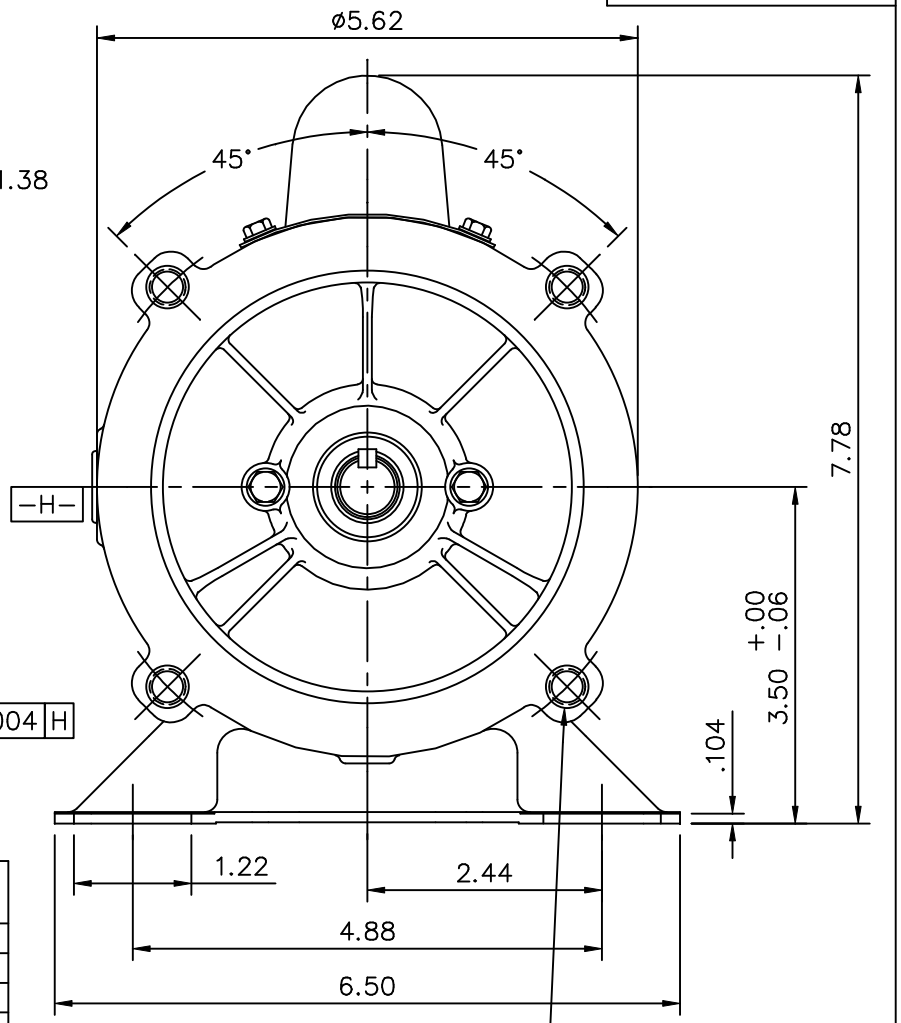

DASH NO.	"C"	"AD"
500	8.99	3.68
525	9.24	3.93
550	9.49	4.18
575	9.74	4.43
600	9.99	4.68
625	10.24	4.93
650	10.49	5.18
675	10.74	5.43

NO.	REVISION	BY & DATE	CHK
01	REVISED CALLOUT FOR GD&T	KMM 6/6/02	

TOLERANCES UNLESS SPECIFIED	
DEC.	INCHES
.X	±.1
.XX	±.03
.XXX	±.005
.XXXX	±.0005
ANG	±1/2°

LEESON

ELECTRIC MOTORS
GEARMOTORS
AND DRIVES

TITLE: OUTLINE – S56C FRAME
RIGID "C" FACE – DRIP PROOF

MAT'L.: 1 PHASE

FINISH

CAD FILE: 031627

RFP

DIST

DRAWN	PG 5/24/01
CHK	
APPD	
SCALE	1=2
REF	031070
FMF	100025
PREV	

SIZE: A

DRAWING NO.: 031627

REV.: 01

THIS DRAWING IN DESIGN AND DETAIL IS OUR PROPERTY AND MUST NOT BE USED EXCEPT IN CONNECTION WITH OUR WORK ALL RIGHTS OF DESIGN AND INVENTION ARE RESERVED
THIS IS AN ELECTRONICALLY GENERATED DOCUMENT – DO NOT SCALE THIS PRINT

7/3/2007 4:22:15 AM -