SS404023

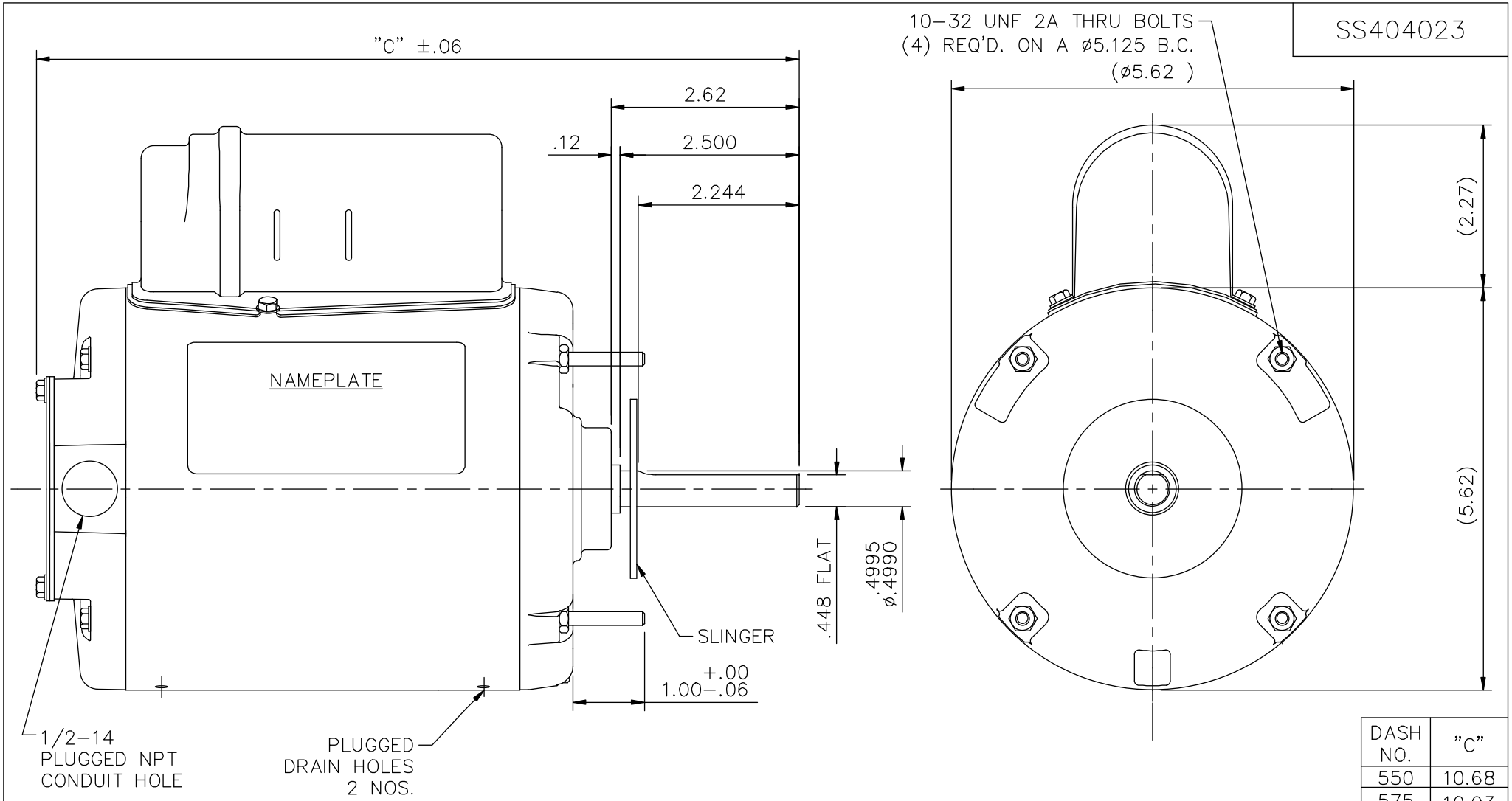

DASH NO.	"C"
550	10.68
575	10.93
600	11.18
625	11.43
650	11.68
675	11.93
725	12.43

NO.	REVISION	BY & DATE	CHK

TOLERANCES UNLESS SPECIFIED

DEC.	INCHES
.X	±.1
.XX	±.03
.XXX	±.005
.XXXX	±.0005
ANG	±1/2°

LEESON

ELECTRIC MOTORS
GEARMOTORS
AND DRIVES

TITLE: OUTLINE – 48 FRAME
ROUND MOUNT – ENCLOSED

MAT'L.

FINISH

RFP

DIST

CAD FILE: SS404023

SIZE: A

DRAWING NO.: SS404023

REV.

DRAWN PST 05–15–2013
CHK SM 05–15–2013
APPD
SCALE 1:1
REF 031707
FMF MU114086
PREV

THIS DRAWING IN DESIGN AND DETAIL IS OUR PROPERTY AND MUST NOT BE USED EXCEPT IN CONNECTION WITH OUR WORK ALL RIGHTS OF DESIGN AND INVENTION ARE RESERVED
THIS IS AN ELECTRONICALLY GENERATED DOCUMENT – DO NOT SCALE THIS PRINT

12/4/2013 12:47:16 AM - Converted by Connexus