RBC PROPRIETARY AND CONFIDENTIAL INFORMATION
This document is the property of REGAL BELOIT CORPORATION ("RBC") including its subsidiaries and divisions and contains proprietary information of RBC. This document is loaned on the express condition that neither it nor the information contained therein shall be disclosed to others without the express written consent of RBC, and that the information shall be used by the recipient only as approved expressly by RBC. This document shall be returned to RBC upon its request. This document may be subject to certain restrictions under U.S. export control laws and regulations.

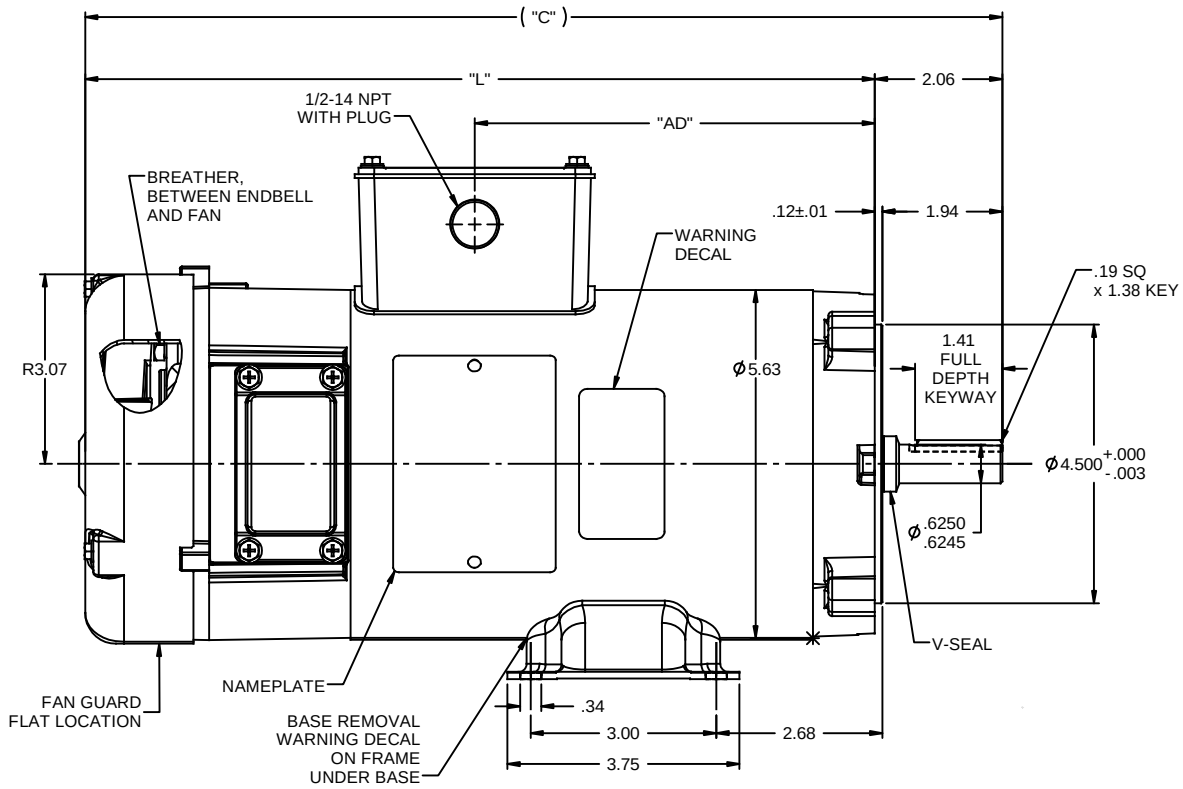

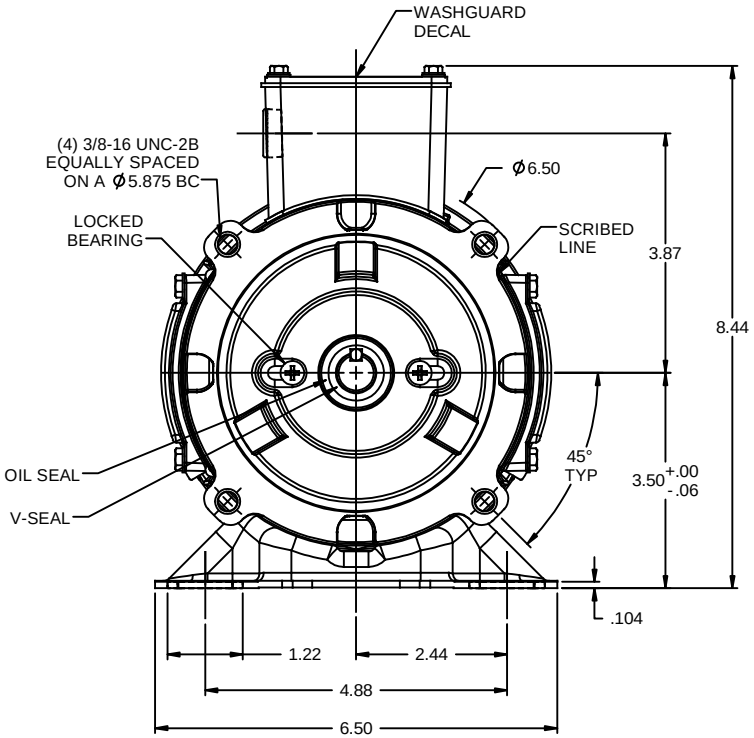

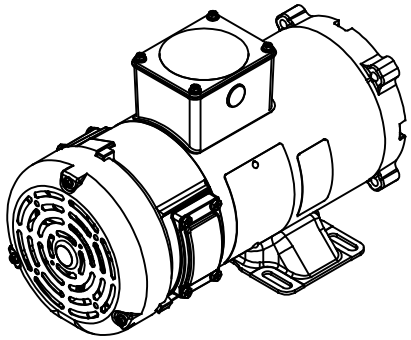

NOTES:
1) MAXIMUM FACE RUNOUT .004 T.I.R.
2) MAXIMUM PILOT ECCENTRICITY .004 T.I.R.
3) PERMISSIBLE SHAFT RUNOUT .002 T.I.R.
4) GASKETS THROUGHOUT.

CATALOG No.	"C"	"L"	"AD"	VOLTS	H.P.	RPM
108232.00	16.82	14.76	8.46	180	1 1/2	1750
108231.00	14.82	12.76	6.46	180	1	1750
108230.00	14.82	12.76	6.46	90	1	1750

NO	REVISION	BY & DATE	CHK
02	ADDED NOTE ABOUT FAN GUARD FLAT LOCATION, ISAAC 09-4813	IPG 12/10/2009	
01	CAT. # 108232.00: "C" WAS 17.32, "L" WAS 15.26, "AD" WAS 8.96, ISAAC 09-1828	IPG 5/14/2009	SK
	RELEASED: REF. 030967 & 031900	IPG 1/30/2009	SK

TOLERANCES UNLESS SPECIFIED

DEC	INCHES
.X	±.1
.XX	±.03
.XXX	±.005
.XXXX	±.0005
ANG	±1/2°

LEESON — ELECTRIC MOTORS GEARMOTORS AND DRIVES

TITLE OUTLINE
48 FRAME DC

MAT'L
FINISH

DRAWN IPG 1/30/09
CHK SK 1/30/09
APPR
SCALE 1:2
REF 030967
FMF 108230.75
PAGE OF

THIRD ANGLE PROJECTION
RFP
PREV
NETWORK FILE NAME
SIZE B
DRAWING NO 031909
REV 02

2/17/2011 4:04:19 PM