031794.00

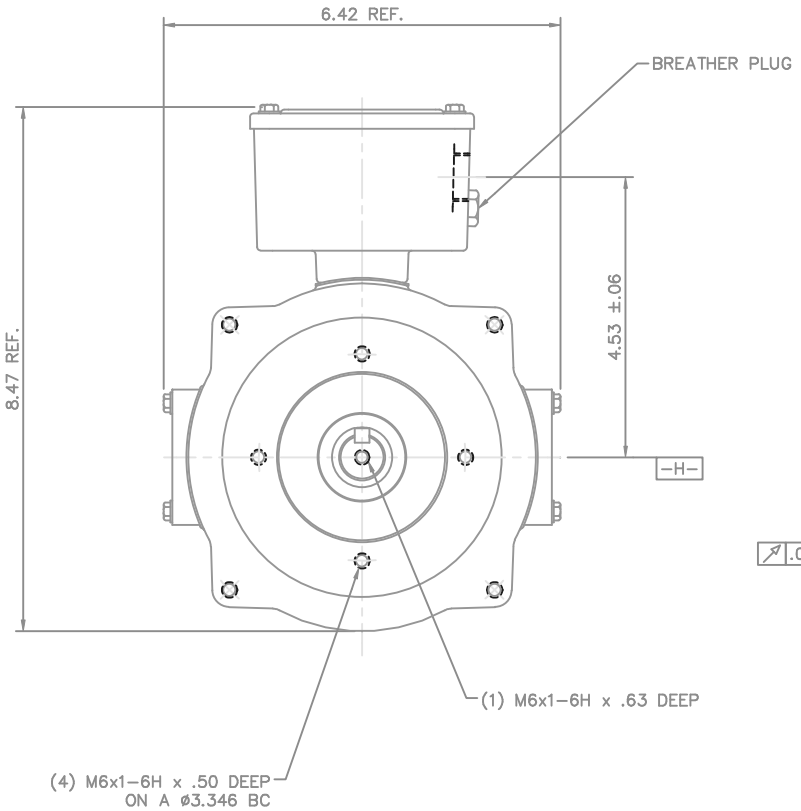

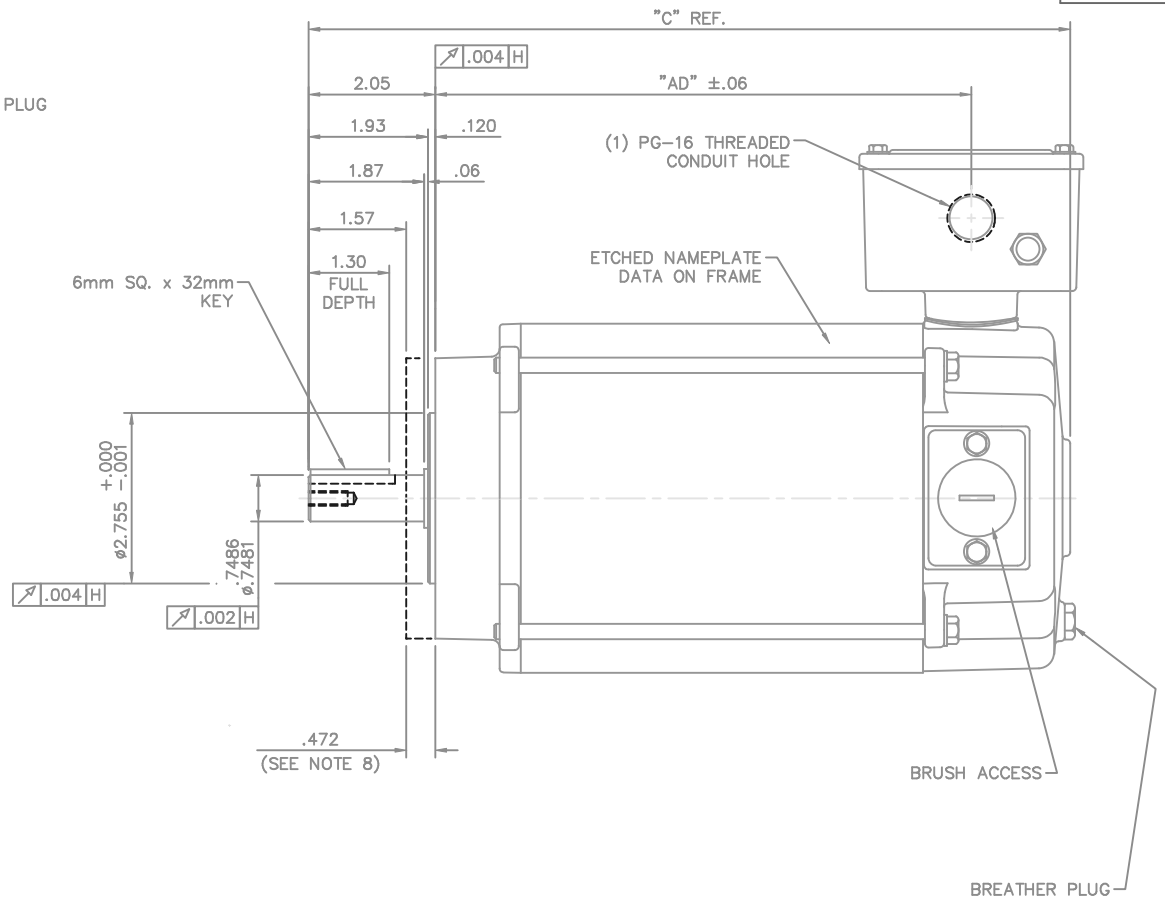

FRAME	"C"	"AD"
N80	11.81	8.16
R80	12.31	8.66
U80	12.81	9.16

STAINLESS STEEL WASHGUARD MOTOR
SPECIAL FEATURES:

1) VITON CONDUIT BOX & COVER GASKETS.
2) VITON O-RINGS IN ENDBELL RABBETS.
3) VITON O-RINGS IN BRUSH HOLDER & CAP.
4) VITON SHAFT SEAL.
5) BREATHER PLUGS IN CONDUIT BOX & ENDBELL.
6) ETCHED NAMEPLATE DATA ON MOTOR FRAME.
7) ALL-STAINLESS STEEL CONSTRUCTION.
8) DIMENSION IS SPACE PROVIDED FOR A BOLT-ON B5 OR B14 ADAPTER KIT FOR IEC-80 FRAME.

NO.	REVISION	BY & DATE	CHK
01	ADDED FRAME DESIGNATION TO TABLE, PER 109081.00	IPG 2/11/05	SAD

TOLERANCES UNLESS SPECIFIED	
DEC.	INCHES
.X	±.1
.XX	±.03
.XXX	±.005
.XXXX	±.0005
ANG	±1/2°

LEESON — ELECTRIC MOTORS GEARMOTORS AND DRIVES

TITLE: OUTLINE - IEC-80 FRAME METRIC FACE MOUNT - TENV

MAT'L.: STAINLESS STEEL MOTOR

FINISH:

CAD FILE: 031794

RFP:

DIST:

DRAWN	PG 1/5/05
CHK	
APPD	PG 1/5/05
SCALE	1=2
REF	031791
FMF	109081.00
PREV	

SIZE: B — DRAWING NO.: 031794.00 — REV.: 01

THIS DRAWING IN DESIGN AND DETAIL IS OUR PROPERTY AND MUST NOT BE USED EXCEPT IN CONNECTION WITH OUR WORK ALL RIGHTS OF DESIGN AND INVENTION ARE RESERVED
THIS IS AN ELECTRONICALLY GENERATED DOCUMENT - DO NOT SCALE THIS PRINT