031789.00

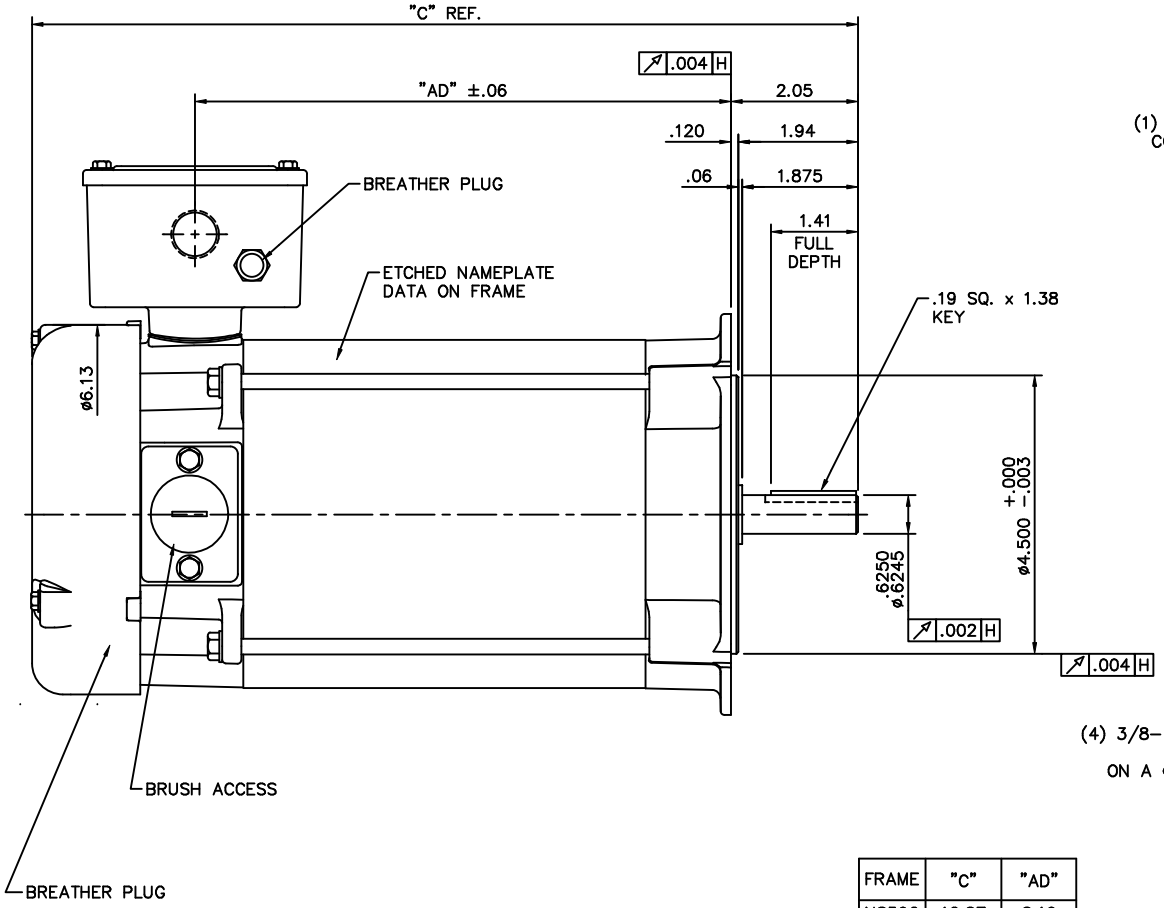

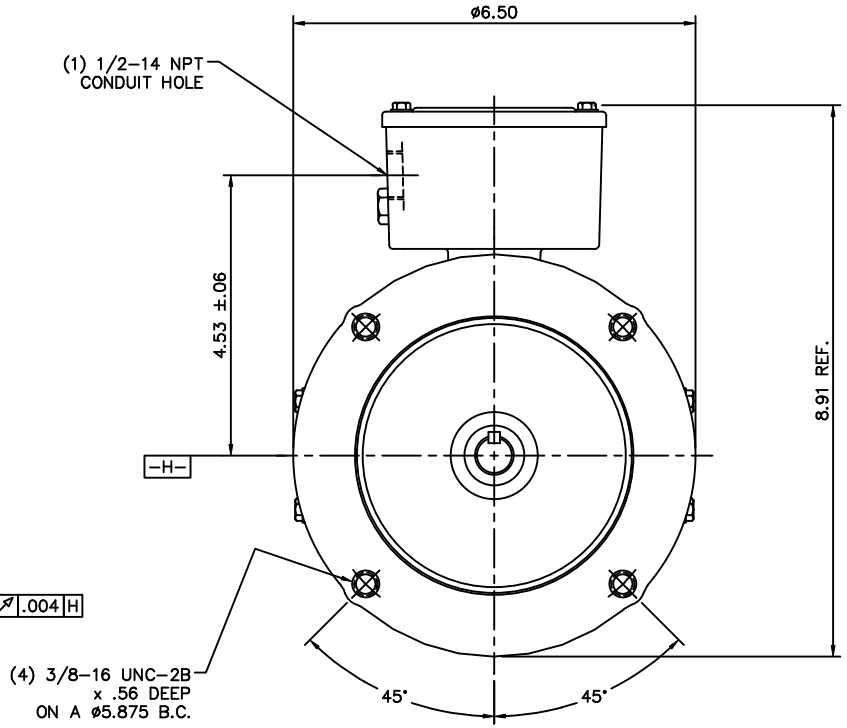

FRAME	"C"	"AD"
NS56C	12.87	8.16
RS56C	13.37	8.66
US56C	13.87	9.16
VS56C	14.37	9.66
WS56C	14.87	10.16
XS56C	15.37	10.66
YS56C	15.87	11.16
ZS56C	16.37	11.66

STAINLESS STEEL WASHGUARD MOTOR
SPECIAL FEATURES:

1) VITON CONDUIT BOX & COVER GASKETS
2) VITON O-RINGS IN ENDBELL RABBETS
3) VITON O-RINGS IN BRUSH HOLDER & CAP
4) VITON SHAFT SEAL
5) BREATHER PLUGS IN CONDUIT BOX & ENDBELL
6) ETCHED NAMEPLATE DATA ON MOTOR FRAME
7) ALL-STAINLESS STEEL CONSTRUCTION

NO.	REVISION	BY & DATE
01	ADDED FRAME DESIGNATION TO TABLE, PER 109088.00	IPG 1/31/05

TOLERANCES UNLESS SPECIFIED

DEC.	INCHES
.X	±.1
.XX	±.03
.XXX	±.005
.XXXX	±.0005
ANG	±1/2°

SAD CHK RFP DIST

LEESON — ELECTRIC MOTORS GEARMOTORS AND DRIVES

TITLE: OUTLINE 48 FRAME DC – S56C MOUNT – TEFC

MAT'L. STAINLESS STEEL

FINISH

CAD FILE 031789

DRAWN PG 12/13/04
CHK
APPD PG 12/13/04
SCALE 1=2
REF 030967
FMF 109088.00
PREV

SIZE B | DRAWING NO. 031789.00 | REV. 01

THIS DRAWING IN DESIGN AND DETAIL IS OUR PROPERTY AND MUST NOT BE USED EXCEPT IN CONNECTION WITH OUR WORK ALL RIGHTS OF DESIGN AND INVENTION ARE RESERVED
THIS IS AN ELECTRONICALLY GENERATED DOCUMENT – DO NOT SCALE THIS PRINT