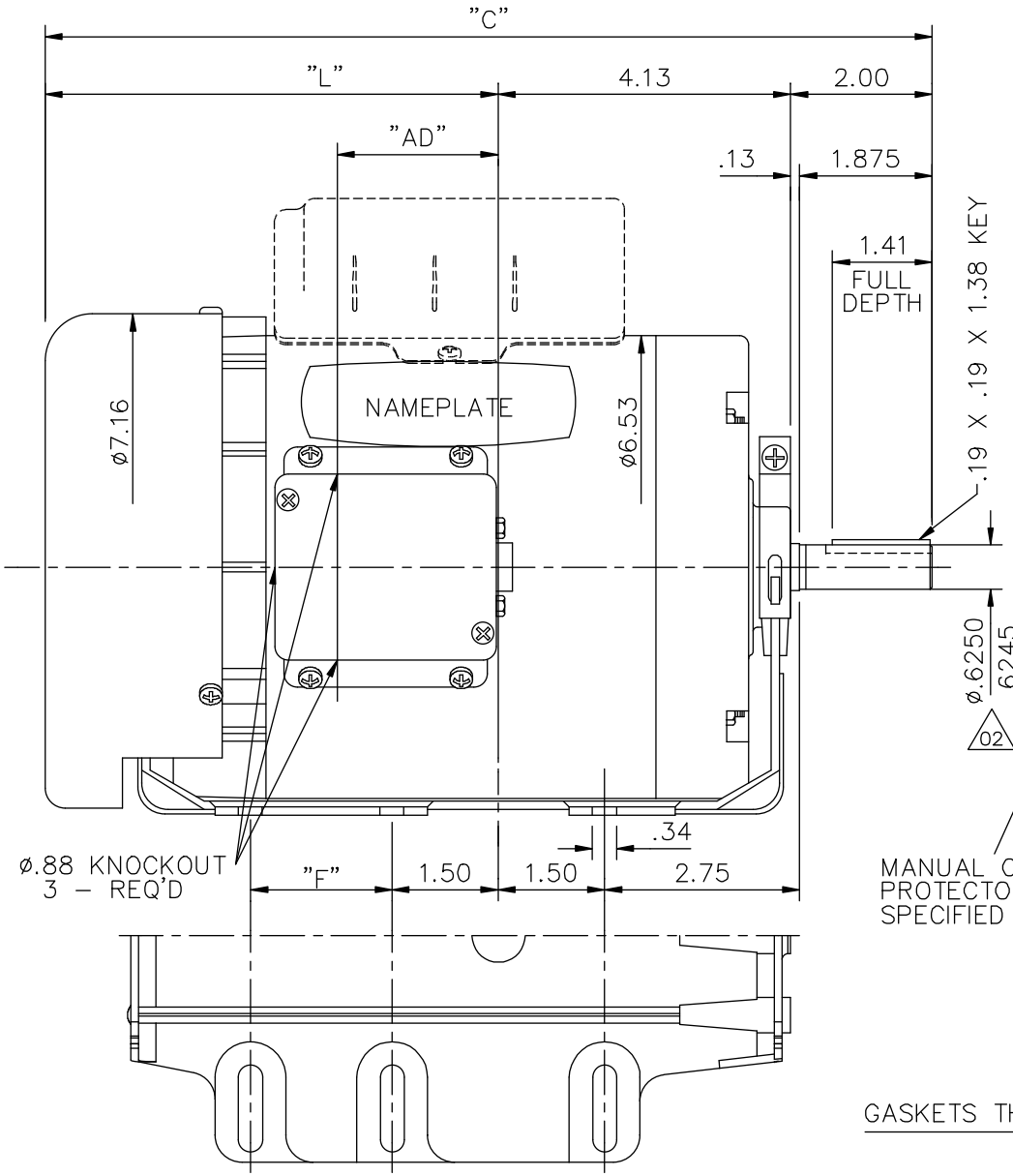

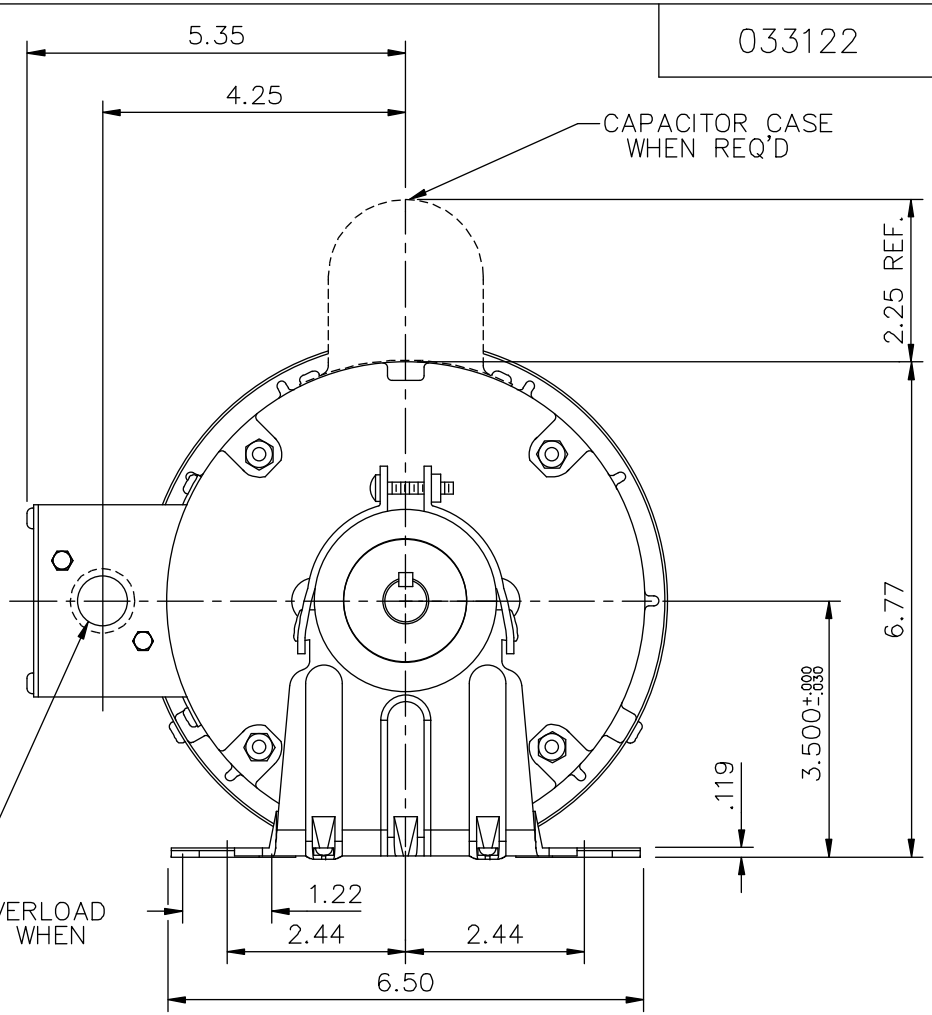

033122

GASKETS THROUGHOUT

DASH NO.	"C"	"L"	"AD"	"F"
500	11.96	5.84	1.78	0.00
550	12.46	6.34	2.28	0.00
600	12.96	6.84	2.78	2.00
650	13.46	7.34	3.28	2.00
700	13.96	7.84	3.78	2.00

NO.	REVISION	BY	DATE
04	ADDED "F" DIMENSION	ARV	5/31/13
03	ADDED BASE VIEW PG	ARV	4/8/11
02	CORRECTED SHAFT DIMENSION'S	KMM	12/13/95
01	REDRAWN, ADDED MANUAL PROTECTOR PG	KMM	03/15/95

TOLERANCES UNLESS OTHERWISE SPECIFIED

DECIMALS	
.00	± .01
.000	± .005
.0000	± .0005
FRACTIONS	± 1/64
ANGLES	± 1/2°
INCH/MM	

LEESON ELECTRIC CORPORATION

DRAWN	RT 07/10/85	TITLE	OUTLINE – 56 FRAME T.E.F.C. – RESILENT
CH'K'D.	RPB		
APPR.	MP	MAT'L.	BRF
SCALE	3=8		
REF.	032511	FINISH	QUIET
FMF	114644		AIR

SIZE A

DRAWING NO. 033122

THIS DRAWING IN DESIGN AND DETAIL IS OUR PROPERTY AND MUST NOT BE USED EXCEPT IN CONNECTION WITH OUR WORK ALL RIGHTS OF DESIGN AND INVENTION ARE RESERVED

5/31/2013 3:26:36 PM - Converted by Connexus