104196LE

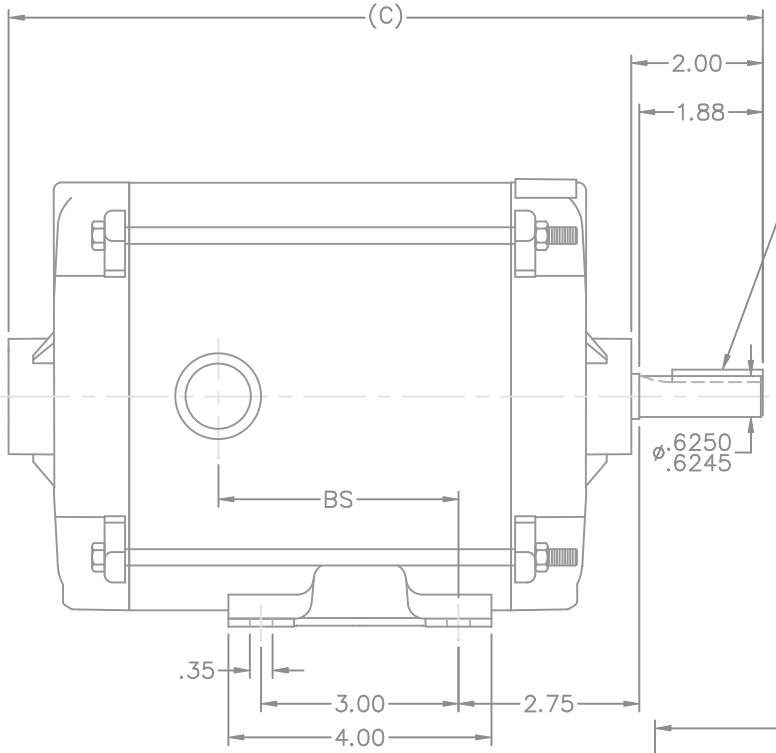

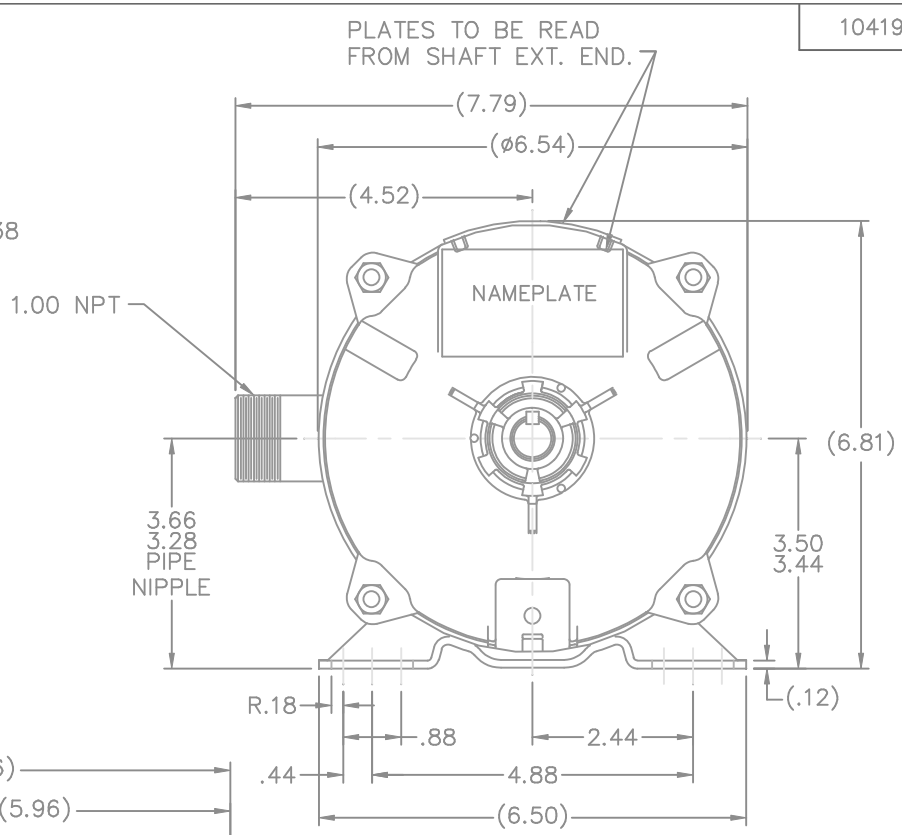

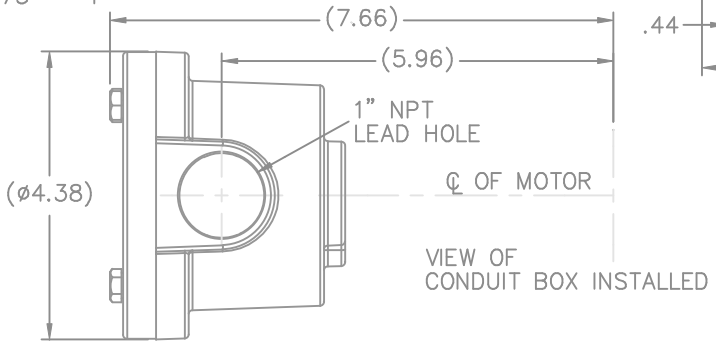

DASH	(C)	BS			
631	11.97	4.15			
681	12.47	4.65			
731	12.97	5.15			
781	13.47	5.65			
831	13.97	6.15			
881	14.47	6.65			
931	14.97	7.15			
981	15.47	7.65			

NO.	REVISION	BY & DATE

TOLERANCES UNLESS SPECIFIED

DEC.	INCHES
.X	±.1
.XX	±.03
.XXX	±.005
.XXXX	±.0005
ANG	±7'30"

LEESON — ELECTRIC MOTORS GEARMOTORS AND DRIVES

TITLE OUTLINE
56 FRAME – EXP. PR. – TENV – 1ø & 3ø

MAT'L.
FINISH
CAD FILE 104196LE
RFP 06–22–2007
DIST WP

SIZE B | DRAWING NO. 104196LE | PAGE OF | REV.

DRAWN RJW 06–22–2007
CHK ML 06–22–2007
APPD GK 06–22–2007
SCALE 17=32
REF
FMF
PREV

THIS DRAWING IN DESIGN AND DETAIL IS OUR PROPERTY AND MUST NOT BE USED EXCEPT IN CONNECTION WITH OUR WORK ALL RIGHTS OF DESIGN AND INVENTION ARE RESERVED
THIS IS AN ELECTRONICALLY GENERATED DOCUMENT – DO NOT SCALE THIS PRINT