RBC PROPRIETARY AND CONFIDENTIAL INFORMATION
This document is the property of REGAL BELOIT CORPORATION ("RBC") including its subsidiaries and divisions and contains proprietary information of RBC. This document is loaned on the express condition that neither it nor the information contained therein shall be disclosed to others without the express written consent of RBC, and that the information shall be used by the recipient only as approved expressly by RBC. This document shall be returned to RBC upon its request. This document may be subject to certain restrictions under U.S. export control laws and regulations.

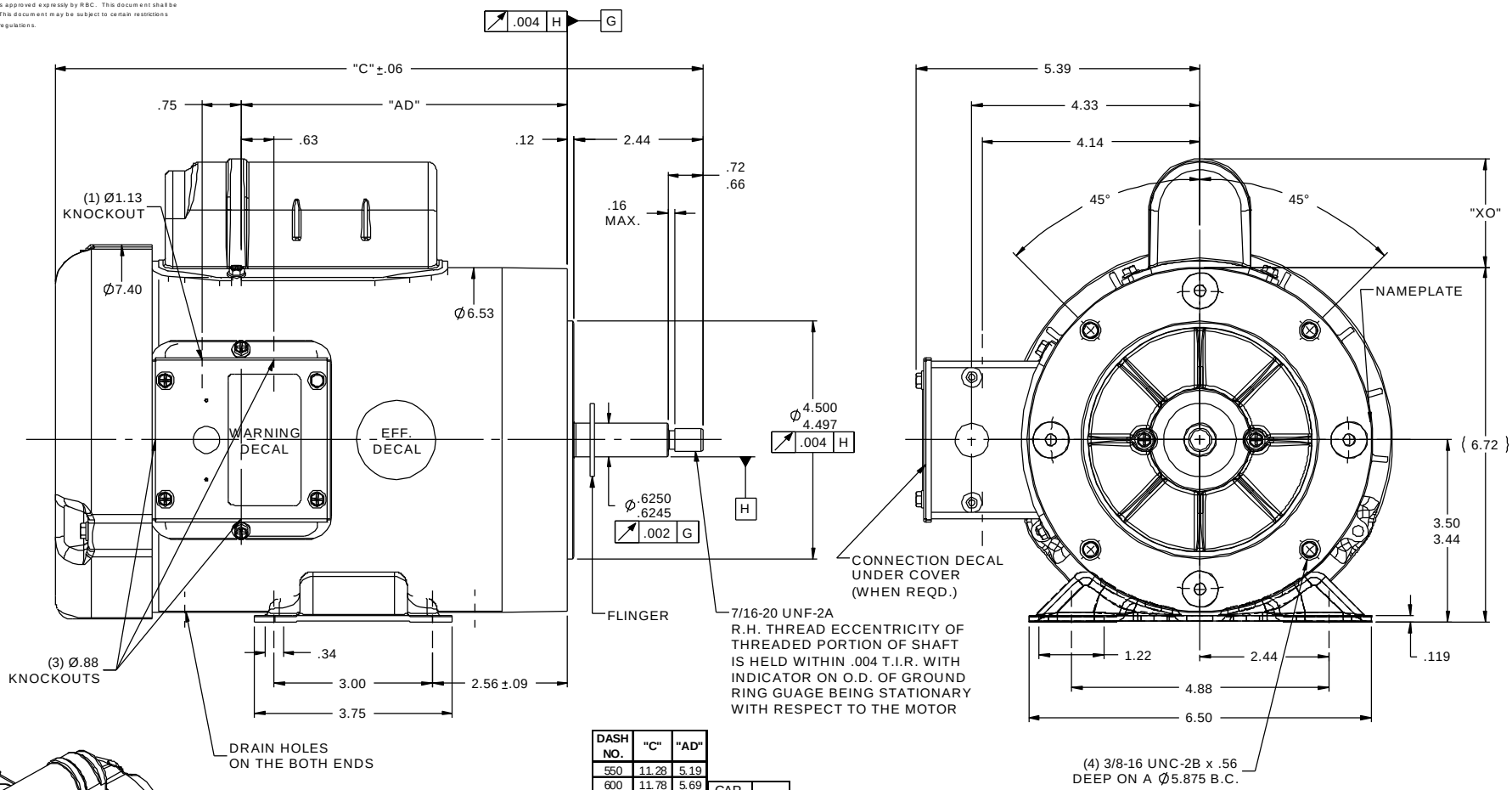

DASH NO.	"C"	"AD"
550	11.28	5.19
600	11.78	5.69
650	12.28	6.19
700	12.78	6.69
750	13.28	7.19
800	13.78	7.69
850	14.28	8.19

CAP. DASH	"XO"
A	1.54
B	2.01
C	2.25

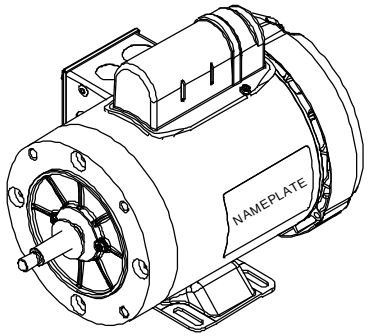

NOTES:
GASKETS THROUGHOUT

NO	REVISION	BY & DATE	CHK
02	ADDED CONNECTION DECAL NOTE PER MU115132(117989.00)	UD 9/18/2013	GRB
01	ADDED ITEM #550 (113637.00)	GRB 12/16/2008	DJ

TOLERANCES UNLESS SPECIFIED

DEC	INCHES
.X	±.1
.XX	±.03
.XXX	±.005
.XXXX	±.0005
ANG	±7'30"

LEESON ELECTRIC MOTORS GEARMOTORS AND DRIVES

TITLE OUTLINE - 56J FRAME
TEFC - RIGID "C"
MAT'L JET PUMP
FINISH

DRAWN GRB 08/19/2008
CHK DJ 08/19/2008
APPR
SCALE 1:2
REF 028608
FMF 113957.00
PAGE OF

THIRD ANGLE PROJECTION
RFP 08/19/2008
PREV
NETWORK FILE NAME 028870
SIZE B
DRAWING NO 028870
REV 02

9/18/2013 4:55:08 AM - Converted by Connexus