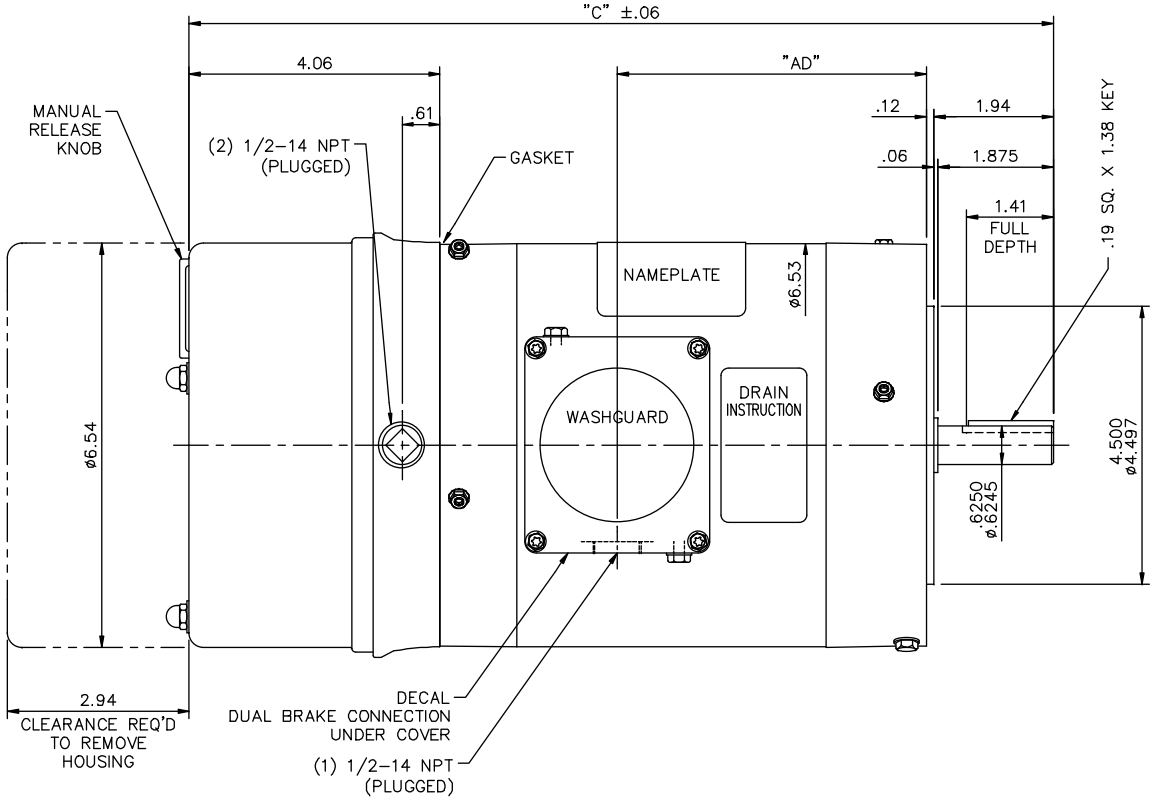


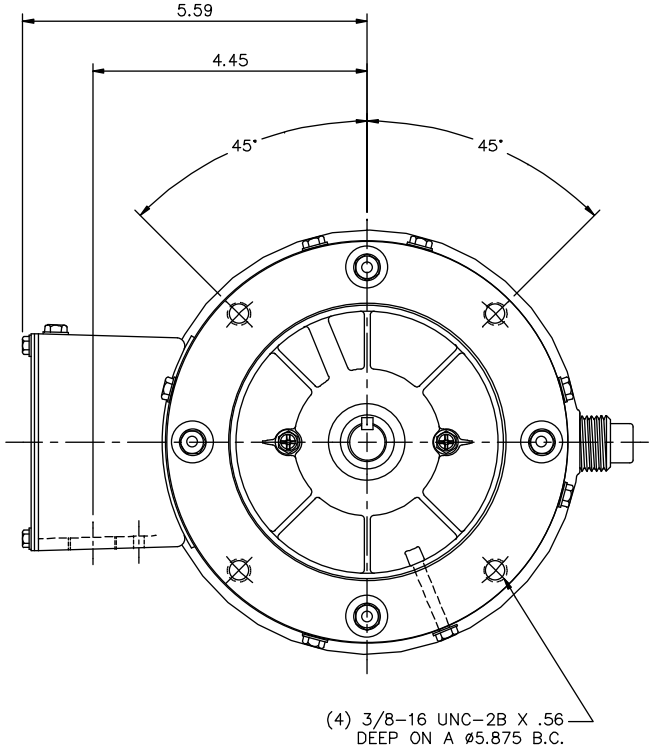


| DASH NO. | "C" | "AD" |
|---|---|---|
| 500 | 14.00 | 5.01 |
| 550 | 14.50 | 5.51 |
| 600 | 15.00 | 6.01 |
| 650 | 15.50 | 6.51 |

MAXIMUM FACE RUNOUT TO BE .004 TIR
MAXIMUM PILOT ECCENTRICITY .004 TIR
PERMISSIBLE SHAFT RUNOUT .002 TIR

WASHGUARD FEATURES:

1) SHAFT SEAL & V–RING
2) DRAIN HOLES IN ENDBELLS & CONDUIT BOX
3) STAINLESS STEEL SHAFT, HARDWARE & NAMEPLATE
4) GASKETS THROUGHOUT

| NO. | REVISION | BY & DATE | CHK |
|---|---|---|---|
| 03 | ADDED DRAIN SCREWS TO ALL HOLES ECR–0034519 | ARV 7/30/13 | SK |
| 02 | NOTE WAS (1) 1/2–14 NPT (PLUGGED) FOR BRAKE | ARV 5/30/09 | |
| 01 | REV'D DRAIN HOLE SCREW LOC'NS IN L.E ENDBELL TO MATCH ENDBELL MACHINING | BJB 03/18/04 | |

TOLERANCES UNLESS SPECIFIED

| DEC. | INCHES |
|---|---|
| .X | ±.1 |
| .XX | ±.03 |
| .XXX | ±.005 |
| .XXXX | ±.0005 |
| ANG | ±1/2° |

LEESON — ELECTRIC MOTORS GEARMOTORS AND DRIVES

TITLE: OUTLINE– 56C FRAME TENV– "C" FACE

MAT'L.: WASHGUARD BRAKEMOTOR

FINISH

CAD FILE: 028577

RFP

DIST

| | |
|---|---|
| DRAWN | LST 1/19/04 |
| CHK | RW 1/19/04 |
| APPD | KH 1/19/04 |
| SCALE | 1=2 |
| REF | 028575 |
| FMF | |
| PREV | |

SIZE: B — DRAWING NO.: 028577 — REV.: 03

THIS DRAWING IN DESIGN AND DETAIL IS OUR PROPERTY AND MUST NOT BE USED EXCEPT IN CONNECTION WITH OUR WORK ALL RIGHTS OF DESIGN AND INVENTION ARE RESERVED
THIS IS AN ELECTRONICALLY GENERATED DOCUMENT – DO NOT SCALE THIS PRINT