028736

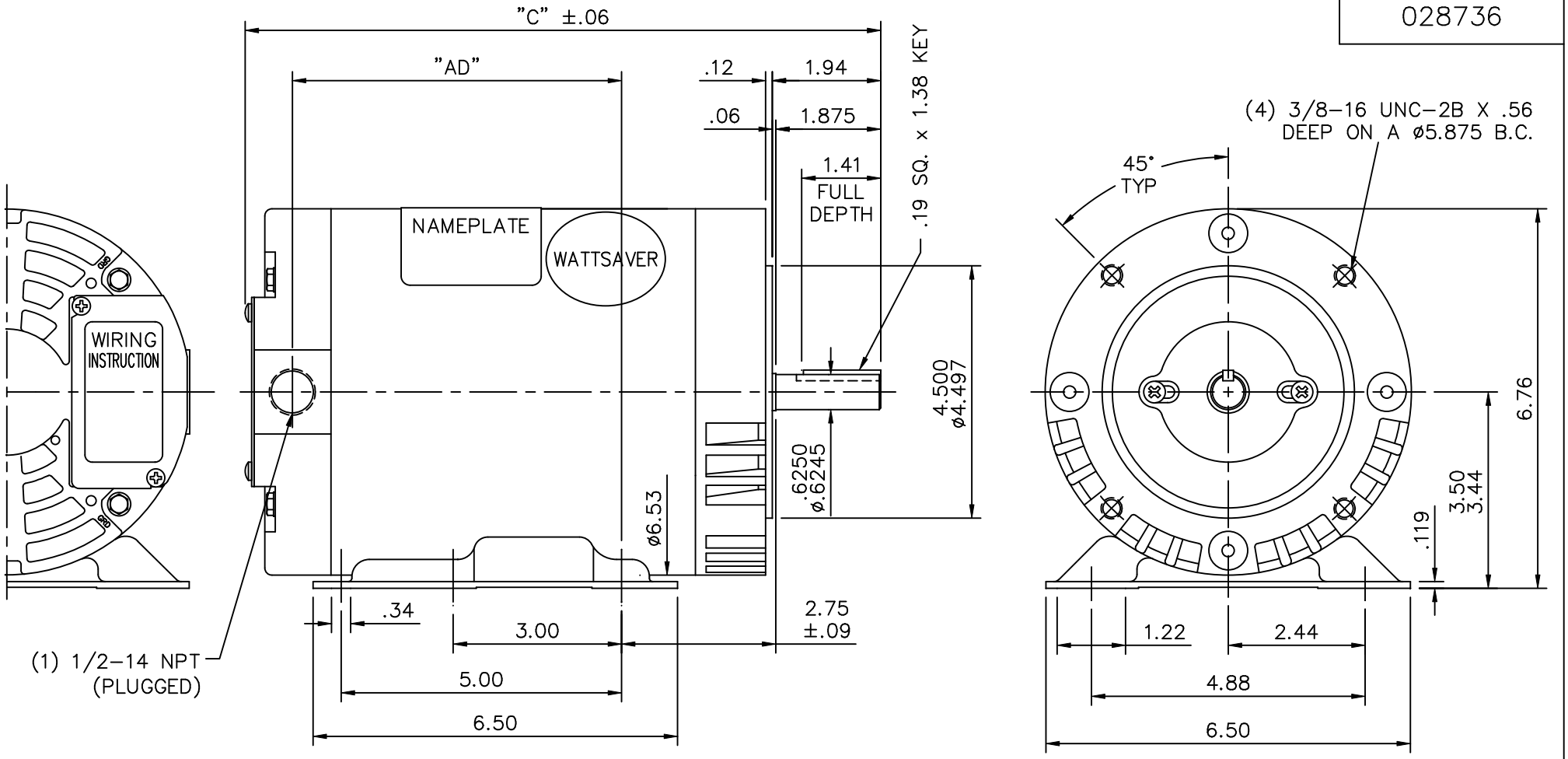

DASH NO.	"C"	"AD"
700	11.84	6.37
750	12.34	6.87
800	12.84	7.37
850	13.34	7.87

MAXIMUM FACE RUNOUT .004 T.I.R.
MAXIMUM PILOT ECCENTRICITY .004 T.I.R.
PERMISSIBLE SHAFT RUNOUT .002 T.I.R.

NO.	REVISION	BY & DATE	CHK

TOLERANCES UNLESS SPECIFIED	
DEC.	INCHES
.X	±.1
.XX	±.03
.XXX	±.005
.XXXX	±.0005
ANG	±1/2°

LEESON — ELECTRIC MOTORS GEARMOTORS AND DRIVES

TITLE: OUTLINE– 56HC FRAME DRIP PROOF– RIGID "C"

MAT'L.: WATTSAVER

FINISH

CAD FILE: 028736

RFP

DIST

DRAWN	LST 10/17/05
CHK	RW 10/18/05
APPD	KH 10/18/05
SCALE	3=8
REF	028701
FMF	116630
PREV	

SIZE: A

DRAWING NO.: 028736

REV.

THIS DRAWING IN DESIGN AND DETAIL IS OUR PROPERTY AND MUST NOT BE USED EXCEPT IN CONNECTION WITH OUR WORK ALL RIGHTS OF DESIGN AND INVENTION ARE RESERVED
THIS IS AN ELECTRONICALLY GENERATED DOCUMENT – DO NOT SCALE THIS PRINT

7/2/2007 8:16:27 PM -