RBC PROPRIETARY AND CONFIDENTIAL INFORMATION
This document is the property of REGAL BELOIT CORPORATION ("RBC") including its subsidiaries and divisions and contains proprietary information of RBC. This document is loaned on the express condition that neither it nor the information contained therein shall be disclosed to others without the express written consent of RBC, and that the information shall be used by the recipient only as approved expressly by RBC. This document shall be returned to RBC upon its request. This document may be subject to certain restrictions under U.S. export control laws and regulations.

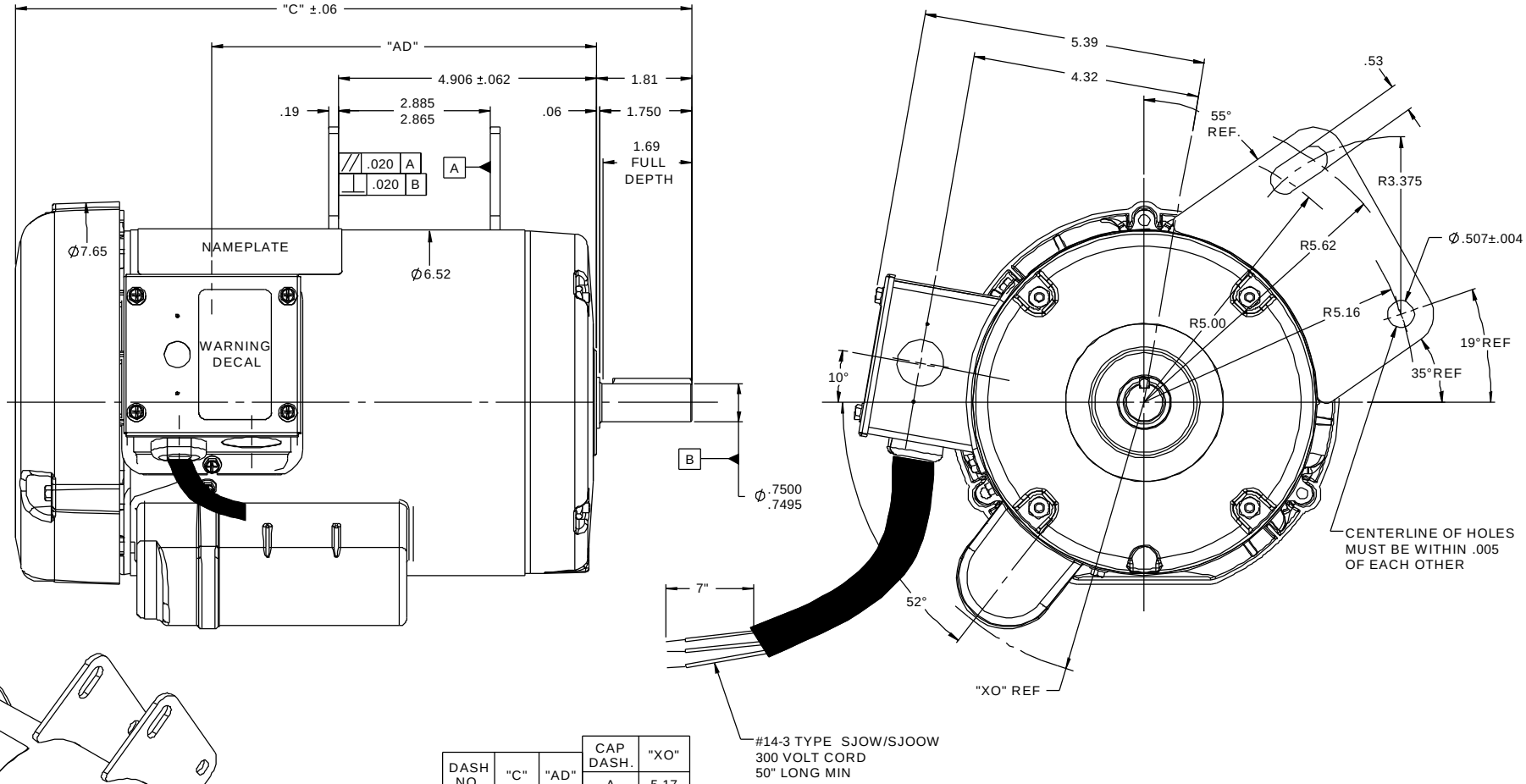

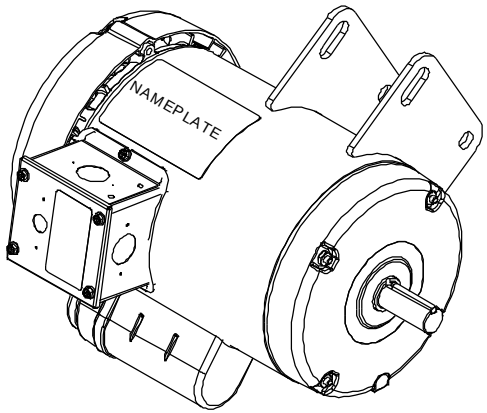

DASH NO.	"C"	"AD"	CAP DASH.	"XO"
			A	5.17
700	12.36	6.74	B	5.55
750	12.86	7.24	C	5.81

NOTES:
GASKETS THROUGHOUT

NO	REVISION	BY & DATE
01	DIMENSIONED BASE HOLE ECR 0041996	GS 8/26/13

TOLERANCES UNLESS SPECIFIED

DEC	INCHES
.X	±.1
.XX	±.03
.XXX	±.005
.XXXX	±.0005
ANG	±7'30"

LEESON ELECTRIC MOTORS GEARMOTORS AND DRIVES

TITLE OUTLINE - 140Y FRAME
TEFC - SPECIAL MOUNT
MAT'L CONTRACTOR'S SAW
FINISH

DRAWN GRB 12/08/08
CHK DJ 12/08/08
APPR DJ 12/08/08
SCALE 1:2
REF 028635
FMF 120925.00
PAGE 1 OF 1

THIRD ANGLE PROJECTION
RFP 12/08/08
PREV
NETWORK FILE NAME 028924
SIZE B
DRAWING NO 028924
REV 01

8/26/2013 2:48:58 PM - Converted by Connexus