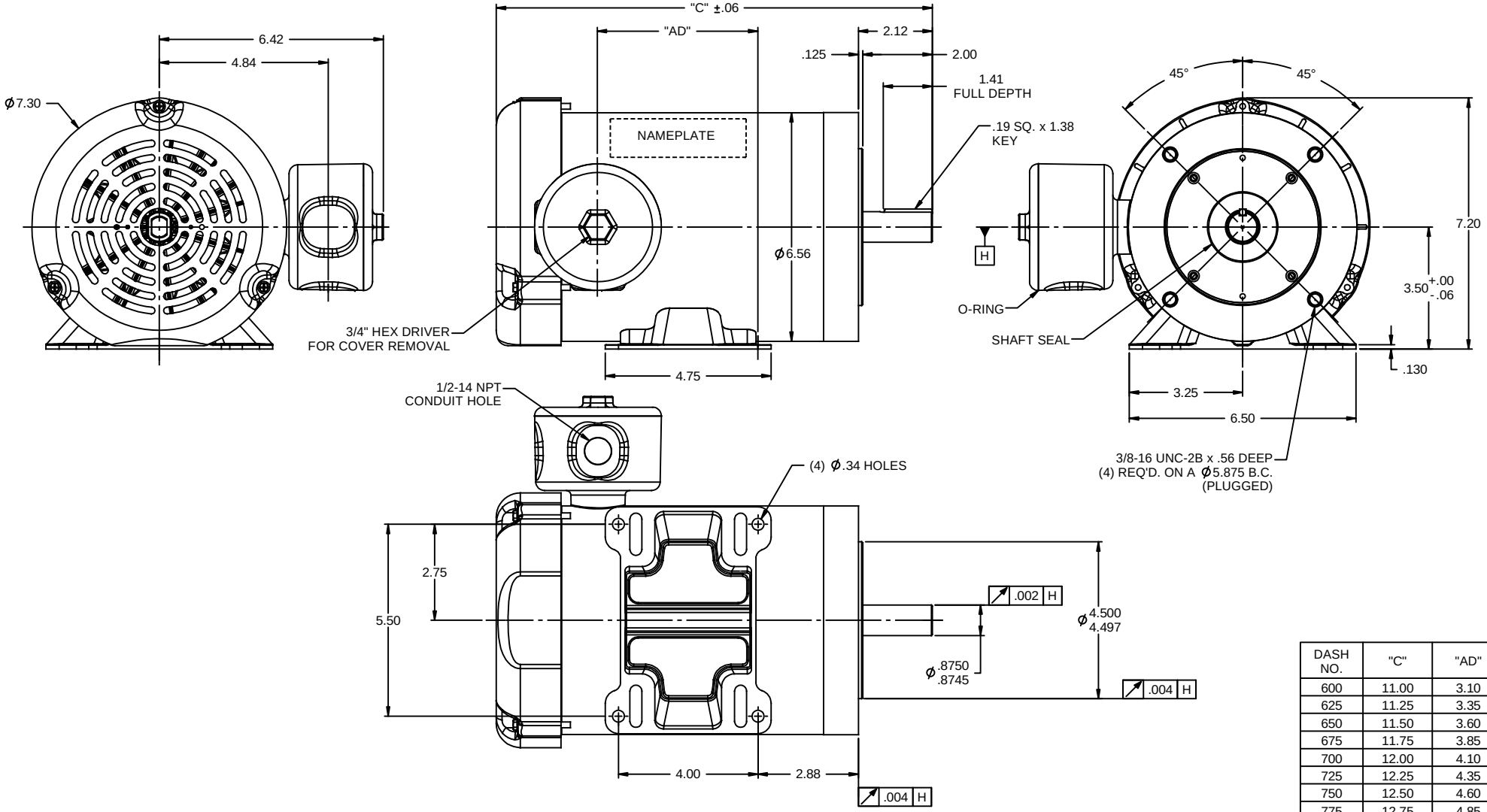

DASH NO.	"C"	"AD"
600	11.00	3.10
625	11.25	3.35
650	11.50	3.60
675	11.75	3.85
700	12.00	4.10
725	12.25	4.35
750	12.50	4.60
775	12.75	4.85

NO	REVISION	BY & DATE	CHK
01	ADDED DASH NO. 725, 750, 775 TO TABLE	PG 10/12/2010	

TOLERANCES UNLESS SPECIFIED

DEC	INCHES
.X	±.1
.XX	±.03
.XXX	±.005
.XXXX	±.0005
ANG	±1/2°

LEESON — ELECTRIC MOTORS GEARMOTORS AND DRIVES

TITLE OUTLINE - 143T FRAME
TEFC - RIGID "C"

MAT'L
FINISH

DRAWN PG 07/19/07
CHK
APPR
SCALE 3:8
REF
FMF G121749.00
PAGE OF

THIRD ANGLE PROJECTION

RFP
PREV
NETWORK FILE NAME 028773

SIZE B
DRAWING NO 028773
REV 01

RBC PROPRIETARY AND CONFIDENTIAL INFORMATION
This document is the property of REGAL BELOIT CORPORATION ("RBC") including its subsidiaries and divisions and contains proprietary information of RBC. This document is loaned on the express condition that neither it nor the information contained therein shall be disclosed to others without the express written consent of RBC, and that the information shall be used by the recipient only as approved expressly by RBC. This document shall be returned to RBC upon its request. This document may be subject to certain restrictions under U.S. export control laws and regulations.