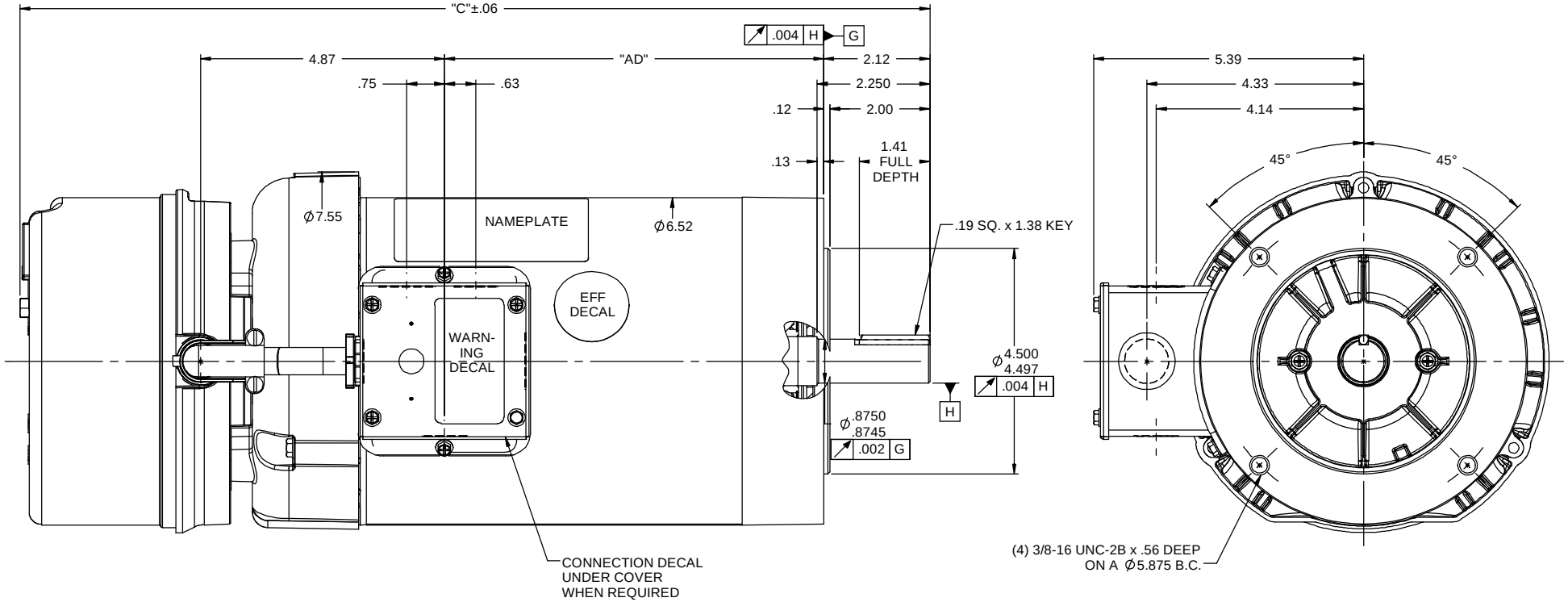

DASH NO.	"C"	"AD"
600	16.73	6.07
650	17.23	6.57
700	17.73	7.07
750	18.23	7.57
800	18.73	8.07

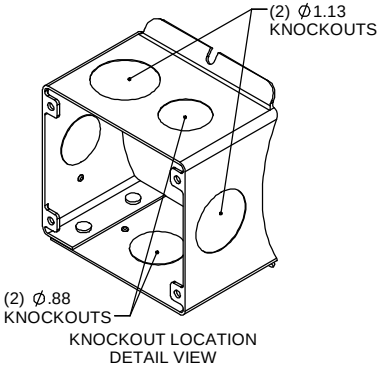

NOTE:
1) GASKETS THROUGHOUT

NO	REVISION	BY & DATE	CHK
02	ADDED -600 (121556) ISAAC 12-0398	GS 2/1/12	
01	REVISED DECAL REPRESENTATION	JJK 3/27/08	

TOLERANCES UNLESS SPECIFIED
DEC INCHES
.X ±.1
.XX ±.03
.XXX ±.005
.XXXX ±.0005
ANG ±1/2°

LEESON ELECTRIC MOTORS GEARMOTORS AND DRIVES

TITLE OUTLINE - 140 TC FRAME
TEFC - "C" FACE - BRAKEMOTOR

MAT'L
FINISH

DRAWN JJK 09/05/07
CHK
APPR
SCALE 1:2
REF 034954
FMF 120332.00
PAGE OF

THIRD ANGLE PROJECTION
RFP
PREV
NETWORK FILE NAME 028790
SIZE B
DRAWING NO 028790
REV 02

2/1/2012 1:24:10 PM - Converted by Connexus