035696

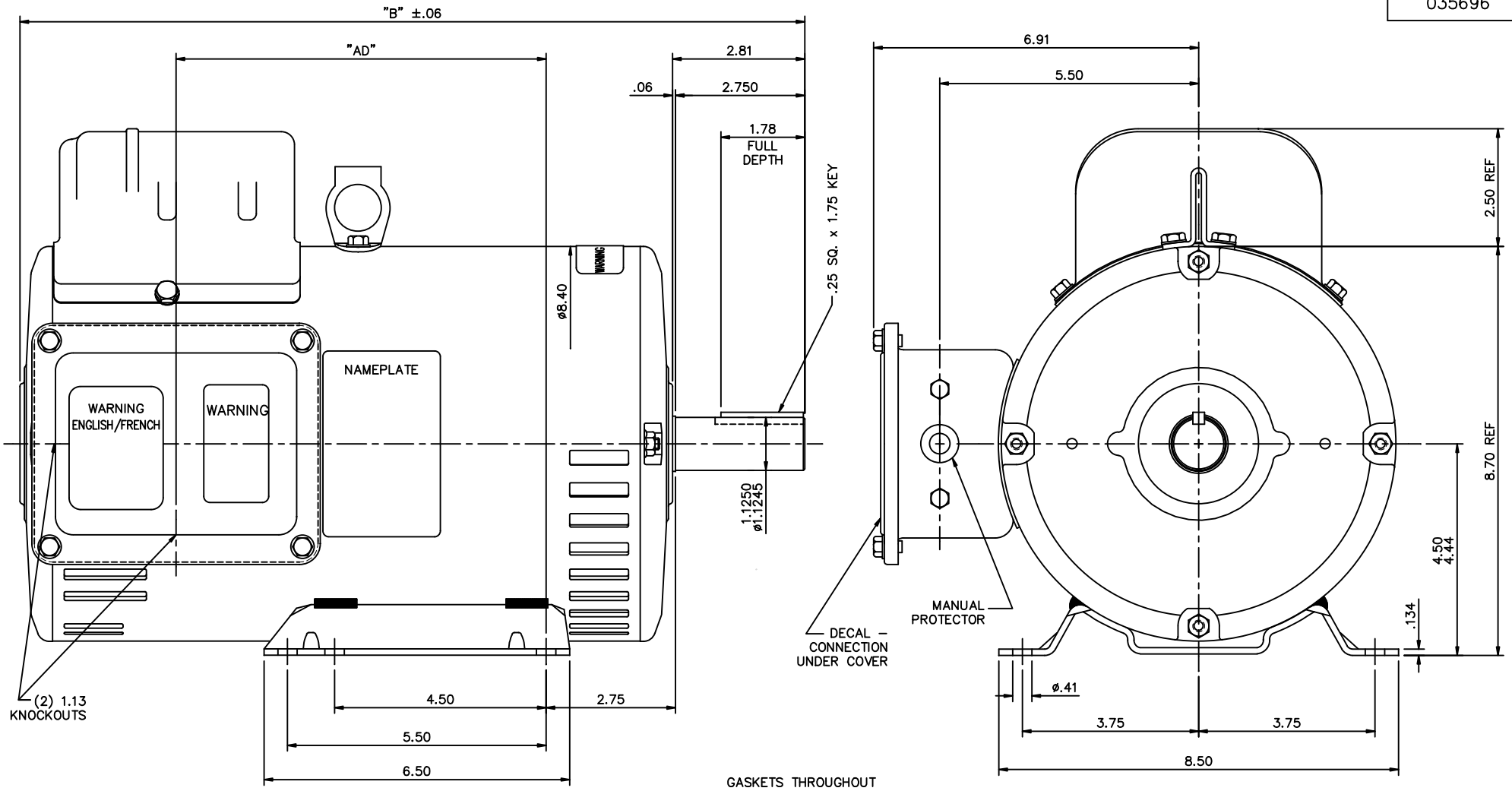

DASH NO.	"C"	"AD"
1000	14.19	5.37
1050	14.69	5.87
1100	15.19	6.37
1150	15.69	6.87
1200	16.19	7.37
1250	16.69	7.87

NO.	REVISION	BY & DATE	CHK

TOLERANCES UNLESS SPECIFIED

DEC.	INCHES
.X	±.1
.XX	±.03
.XXX	±.005
.XXXX	±.0005
ANG	±1/2°

MARATHON ELECTRIC

TITLE: OUTLINE
DRIP PROOF – RIGID MOUNT

MAT'L.
FINISH
CAD FILE 035696
RFP
DIST

DRAWN VV 08/09/07
CHK
APPD
SCALE 1=2
REF 035562
FMF 184TBDW7630
PREV

SIZE B
DRAWING NO. 035696
REV.

THIS DRAWING IN DESIGN AND DETAIL IS OUR PROPERTY AND MUST NOT BE USED EXCEPT IN CONNECTION WITH OUR WORK ALL RIGHTS OF DESIGN AND INVENTION ARE RESERVED
THIS IS AN ELECTRONICALLY GENERATED DOCUMENT – DO NOT SCALE THIS PRINT