RBC PROPRIETARY AND CONFIDENTIAL INFORMATION
This document is the property of REGAL BELOIT CORPORATION ("RBC") including its subsidiaries and divisions and contains proprietary information of RBC. This document is loaned on the express condition that neither it nor the information contained therein shall be disclosed to others without the express written consent of RBC, and that the information shall be used by the recipient only as approved expressly by RBC. This document shall be returned to RBC upon its request. This document may be subject to certain restrictions under U.S. export control laws and regulations.

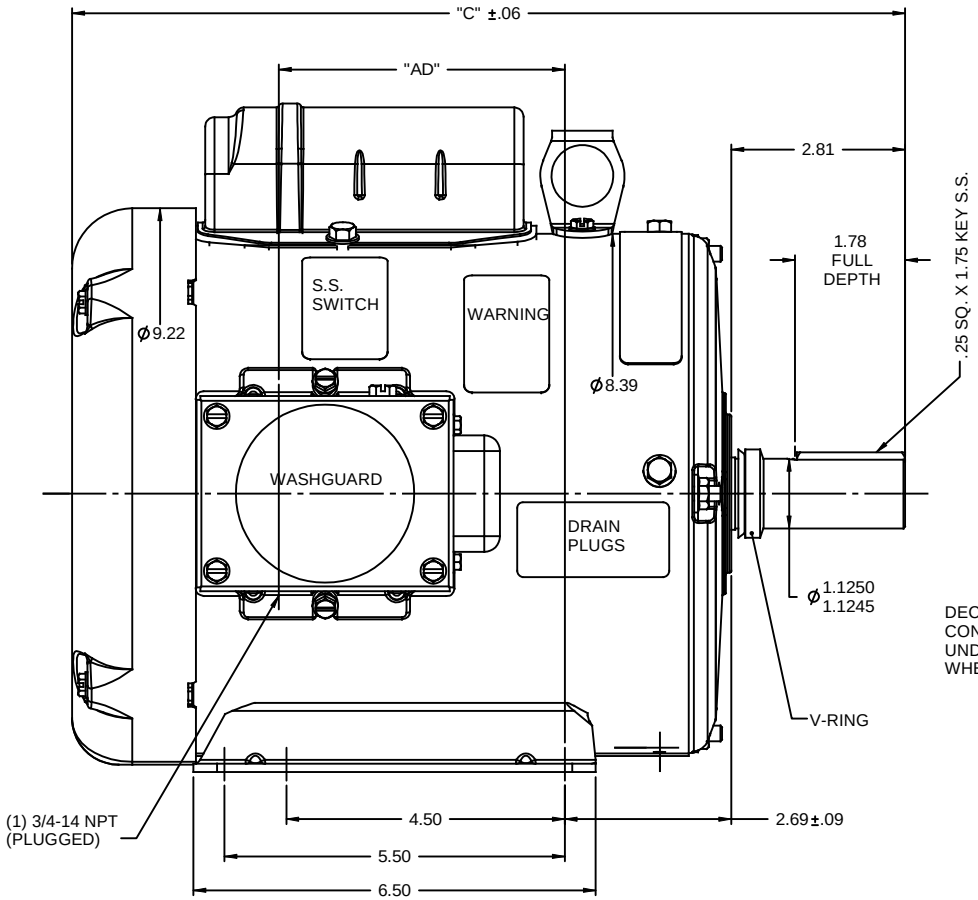


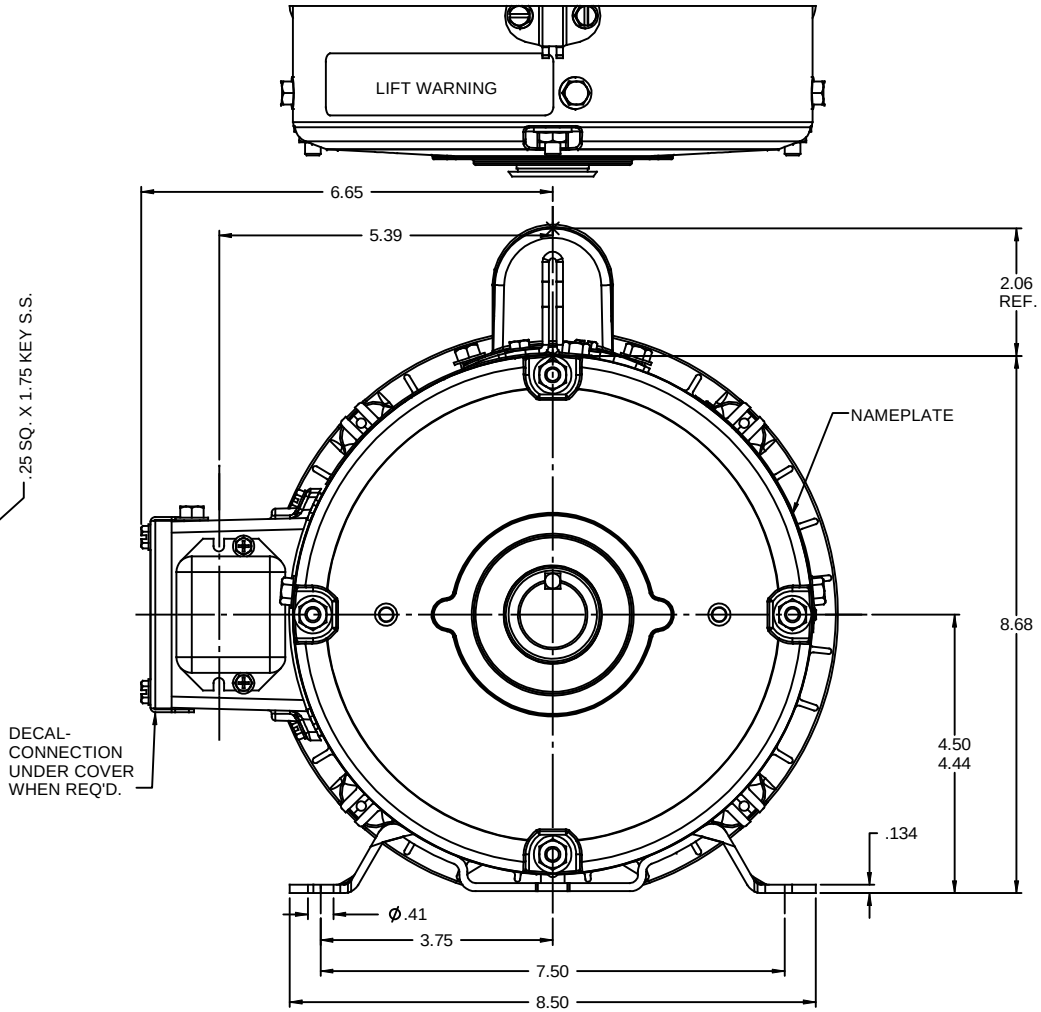


**SPECIAL FEATURES:**
SHAFT SEAL & V-RINGS
DRAIN HOLES IN FRAME & CONDUIT BOX
GASKETS THROUGHOUT
STAINLESS STEEL SHAFT, HARDWARE & NAMEPLATE

| DASH NO. | "C" | "AD" |
|---|---|---|
| 800 | 13.46 | 4.62 |
| 850 | 13.96 | 5.12 |
| 900 | 14.46 | 5.62 |
| 950 | 14.96 | 6.12 |
| 1000 | 15.46 | 6.62 |
| 1050 | 15.96 | 7.12 |
| 1100 | 16.46 | 7.62 |
| 1150 | 16.96 | 8.12 |

| NO | REVISION | BY & DATE | CHK |
|---|---|---|---|
| - | UPDATED & REDRAWN ON SOLIDWORKS | LST 11/30/2009 | XX |

TOLERANCES UNLESS SPECIFIED

| DEC | INCHES |
|---|---|
| .X | ±.1 |
| .XX | ±.03 |
| .XXX | ±.005 |
| .XXXX | ±.0005 |
| ANG | ±1/2° |

REGAL-BELOIT CORPORATION

TITLE OUTLINE - 180T FRAME
TEFC - RIGID
MAT'L WASHGUARD
FINISH
RFP
PREV
NETWORK FILE NAME

THIRD ANGLE PROJECTION

| | |
|---|---|
| DRAWN | RDW 2/18/03 |
| CHK | |
| APPR | SW 2/18/03 |
| SCALE | 1:2 |
| REF | OL131571 |
| FMF | |
| PAGE | OF |
| SIZE | B |
| DRAWING NO | 035460 |
| REV | - |

11/30/2009 1:48:56 PM