035847

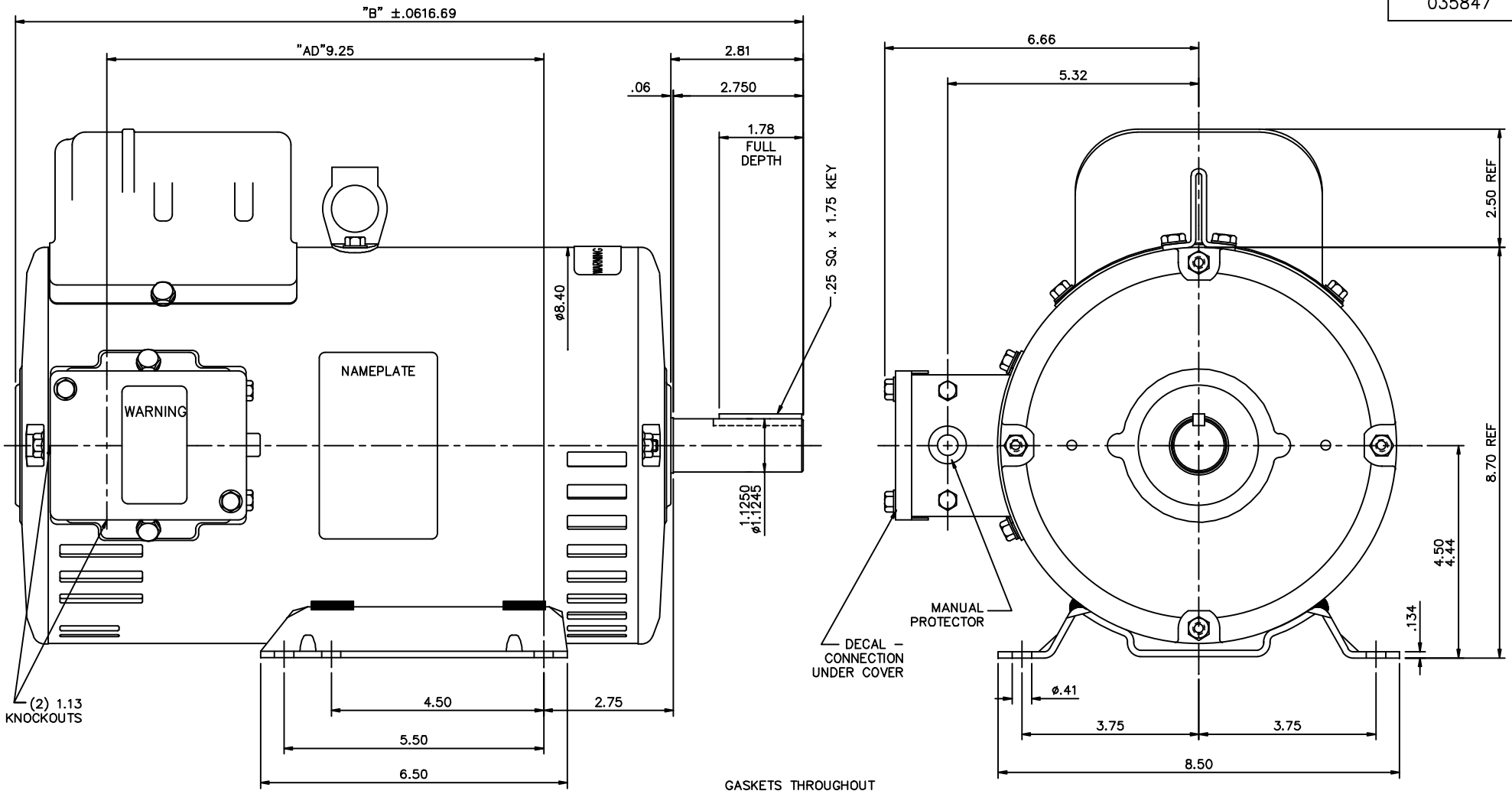

DASH NO.	"C"	"AD"
950	13.69	6.25
1000	14.19	6.75
1050	14.69	7.25
1100	15.19	7.75
1150	15.69	8.25
1200	16.19	8.75
1250	16.69	9.25

NO.	REVISION	BY & DATE

TOLERANCES UNLESS SPECIFIED

DEC.	INCHES
.X	±.1
.XX	±.03
.XXX	±.005
.XXXX	±.0005
ANG	±1/2°

CHK

MARATHON ELECTRIC

TITLE OUTLINE
DRIP PROOF – RIGID MOUNT

MAT'L.

FINISH

CAD FILE 035847

RFP

DIST

SIZE B

DRAWING NO. 035847

REV.

DRAWN VS 2/15/2012

CHK

APPD

SCALE 1=2

REF 035696

FMF 131851.00

PREV

THIS DRAWING IN DESIGN AND DETAIL IS OUR PROPERTY AND MUST NOT BE USED EXCEPT IN CONNECTION WITH OUR WORK ALL RIGHTS OF DESIGN AND INVENTION ARE RESERVED
THIS IS AN ELECTRONICALLY GENERATED DOCUMENT – DO NOT SCALE THIS PRINT