035465

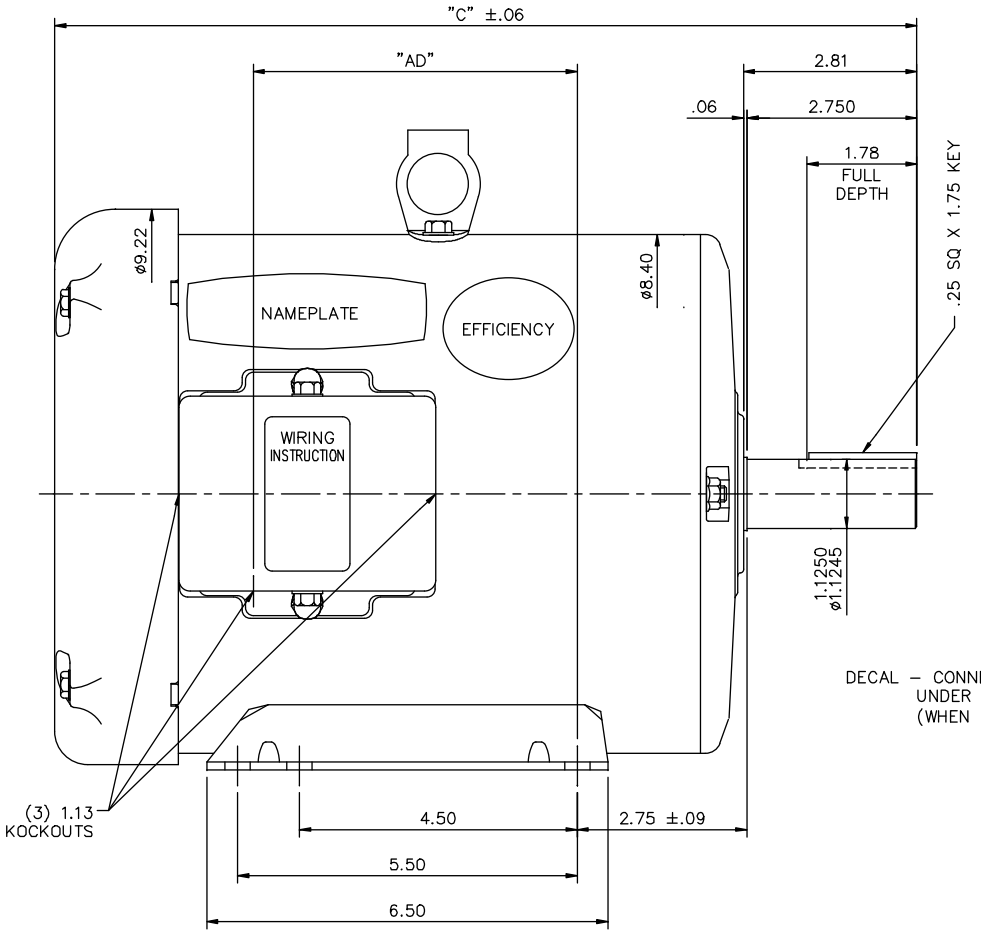

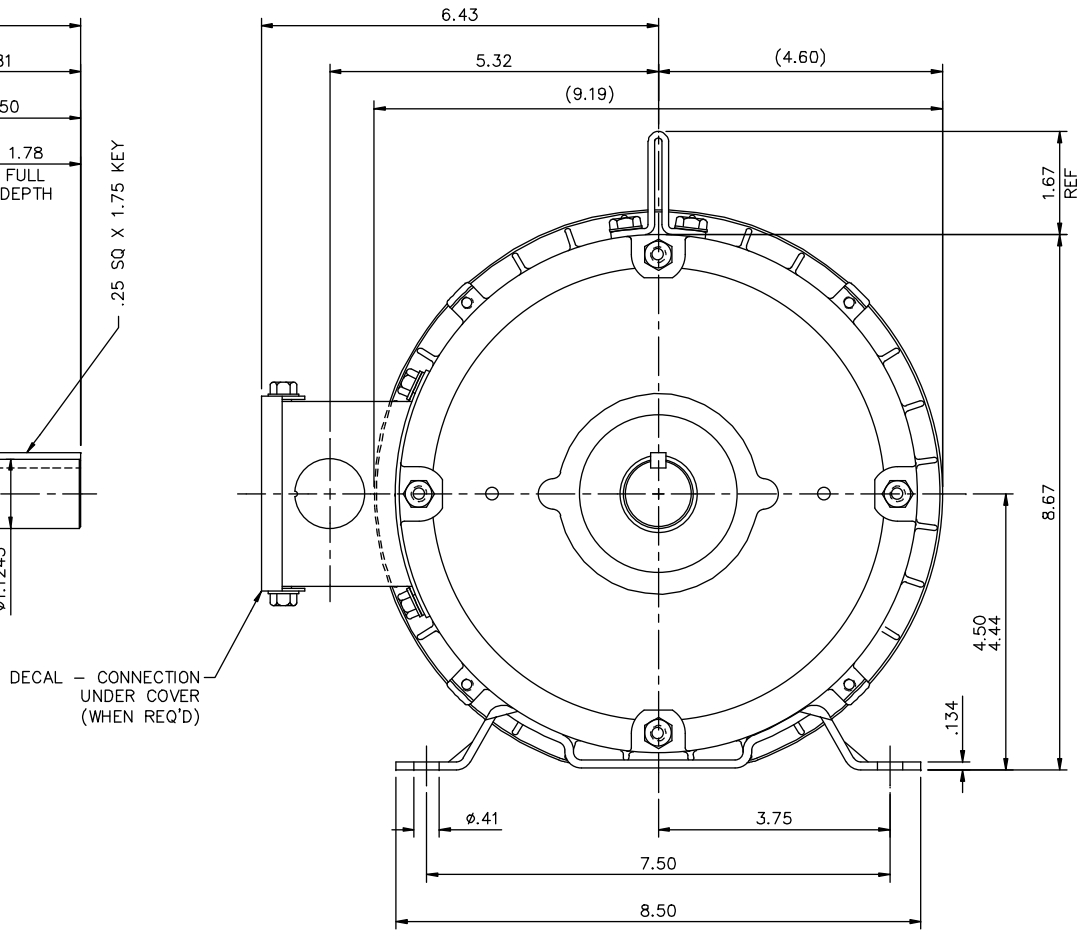

GASKETS THROUGHOUT

DASH NO.	"C"	"AD"
750	12.96	4.25
800	13.46	4.75
850	13.96	5.25
900	14.46	5.75
950	14.96	6.25
1000	15.46	6.75
1050	15.96	7.25
1100	16.46	7.75
1150	16.96	8.25

NO.	REVISION	BY & DATE	CHK
03	ADDED DIMENSION 9.19	KR 06/21/13	
02	ADDED DASH NO. 750, PER ECR 85453	RLW 08/01/05	
01	ADDED DASH NO. 800, PER ECR 83464	BJB 03/08/05	

TOLERANCES UNLESS SPECIFIED

DEC.	INCHES
.X	±.1
.XX	±.03
.XXX	±.005
.XXXX	±.0005
ANG	±1/2°

LEESON — ELECTRIC MOTORS GEARMOTORS AND DRIVES

TITLE: OUTLINE – 180T FRAME TEFC – RIGID

MAT'L.: GENERAL PURPOSE

FINISH:

DRAWN MGM 2/21/03
CHK
APPD RDW 2/21/03
SCALE 1=2
REF 035450
FMF
PREV

THIS DRAWING IN DESIGN AND DETAIL IS OUR PROPERTY AND MUST NOT BE USED EXCEPT IN CONNECTION WITH OUR WORK ALL RIGHTS OF DESIGN AND INVENTION ARE RESERVED
THIS IS AN ELECTRONICALLY GENERATED DOCUMENT – DO NOT SCALE THIS PRINT

RFP 1/20/03
DIST NLV
CAD FILE 035465
SIZE B
DRAWING NO. 035465
REV. 03

6/21/2013 9:12:12 AM - Converted by Connexus