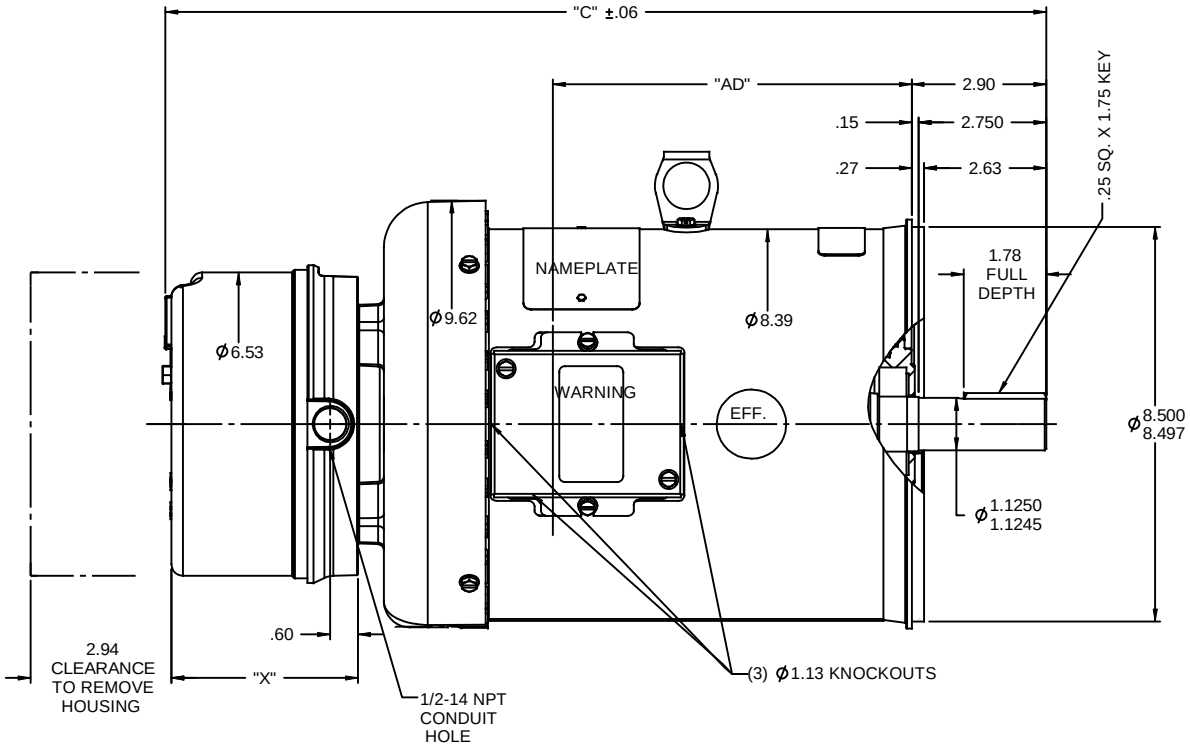

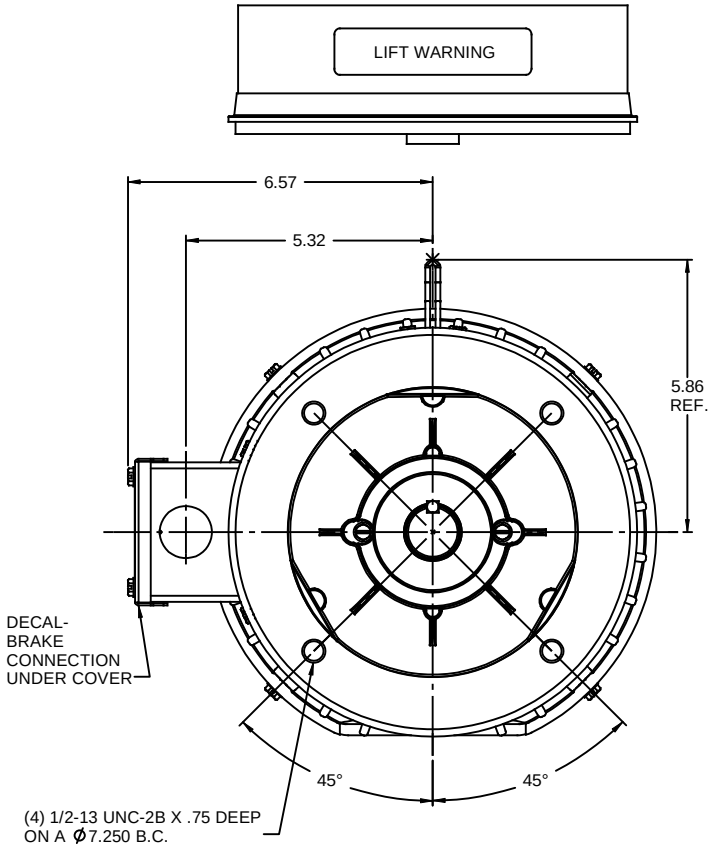

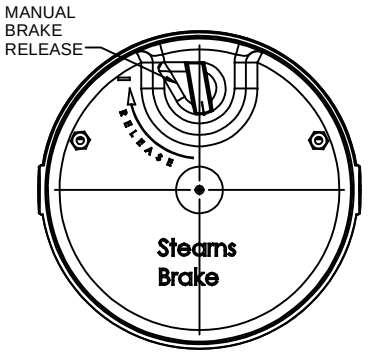

BRAKE HOUSING

BRAKE TORQUE	"X"
15 FT-LB	4.00
20 FT-LB	4.46
25 FT-LB	4.46

DASH NO.	"C"	"AD"
650	16.98	5.87
700	17.48	6.37
750	17.98	6.87
800	18.48	7.37
850	18.98	7.87
900	19.48	8.37
950	19.98	8.87

GASKETS THROUGHOUT
MAXIMUM FACE RUNOUT TO BE .004 T.I.R.
MAXIMUM PILOT ECCENTRICITY TO BE .004 T.I.R.
PERMISSIBLE SHAFT RUNOUT TO BE .002 T.I.R.

NO	REVISION	BY & DATE	CHK
-	REDRAWN IN SOLIDWORKS WITHOUT BASE	LST 11/9/2009	XX

TOLERANCES UNLESS SPECIFIED

DEC	INCHES
.X	±.1
.XX	±.01
.XXX	±.005
.XXXX	±.0005
ANG	±1/2°

REGAL-BELOIT CORPORATION

TITLE OUTLINE - 180TC FRAME
TEFC - "C" FACE
MAT'L BRAKE MOTOR
FINISH

DRAWN PG 9/24/97
CHK
APPR RSK 9/24/97
SCALE 3:8
REF 035236
FMF STANDARD
PAGE OF

THIRD ANGLE PROJECTION
RFP
PREV
NETWORK FILE NAME
SIZE B
DRAWING NO 035362
REV -

1/7/2010 5:13:13 PM