SS207868LN

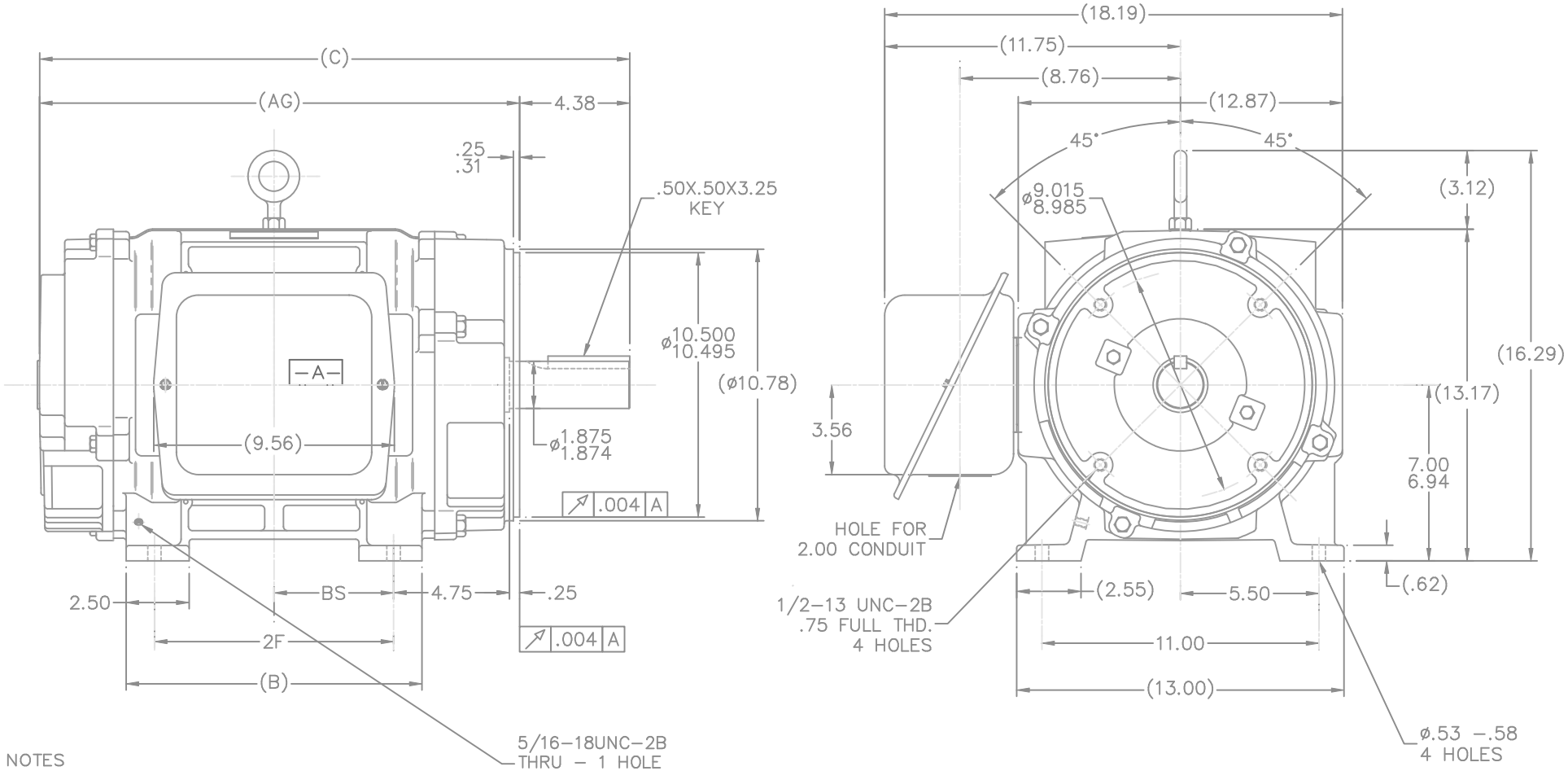

NOTES

1. BOX CAN BE ROTATED IN 90° STEPS
2. BOX CAN BE MOUNTED ON OPPOSITE SIDE BY REMOVING BRACKETS AND TURNING FRAME 180°
3. NAMEPLATE TO BE READ FROM CONDUIT BOX SIDE OF MOTOR

DASH	FRAME	B	C	AG	2F	BS
1275	284TC	11.75	23.44	19.06	9.50	4.75
1425	286TC	13.25	24.94	20.56	11.00	5.50

NO.	REVISION	BY & DATE	CHK

TOLERANCES UNLESS SPECIFIED

DEC.	INCHES
.X	±.1
.XX	±.03
.XXX	±.005
.XXXX	±.0005
ANG	±7'30"

Lincoln MOTORS

TITLE OUTLINE DR. PR. CAST IRON 280TC FR. DBL END VENT.

MAT'L.

FINISH

CAD FILE SS207868LN

RFP 12/17/2003

DIST LB

DRAWN CAV 12/16/2003
CHK ML 12/16/2003
APPD CAV 12/17/2003
SCALE 1=4
REF
FMF MU49134
PREV

SIZE B | DRAWING NO. SS207868LN | PAGE OF | REV.

THIS DRAWING IN DESIGN AND DETAIL IS OUR PROPERTY AND MUST NOT BE USED EXCEPT IN CONNECTION WITH OUR WORK ALL RIGHTS OF DESIGN AND INVENTION ARE RESERVED
THIS IS AN ELECTRONICALLY GENERATED DOCUMENT – DO NOT SCALE THIS PRINT