Uncontrolled Copy

037643LE

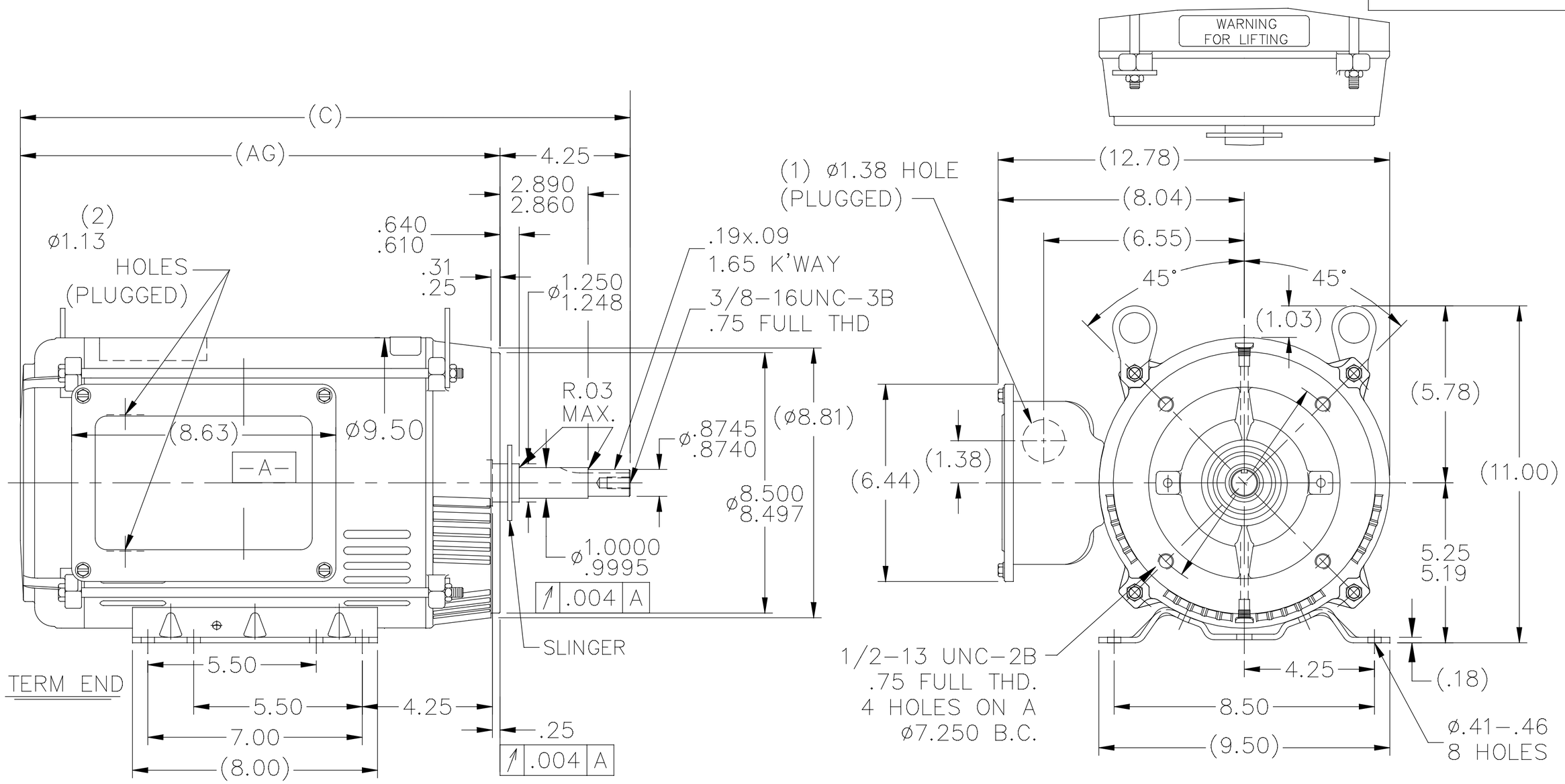

DASH	FR.	C	AG
965	213JM	18.42	14.17
1115	213/15JM	19.92	15.67
1240	213/15JM	21.17	16.92

ORACLE REV	001

NOTES:
1. NAMEPLATE TO BE READ FROM C'BOX SIDE OF MOTOR.

NO.	REVISION	BY & DATE	CHK
E	ADDED "AJ" DIM OF 7.250 ECO 0083886	GWS 8/21/15	

TOLERANCES UNLESS SPECIFIED	
DEC.	INCHES
.X	±.1
.XX	±.03
.XXX	±.005
.XXXX	±.0005
ANG	±7'30"

LEESON — ELECTRIC MOTORS GEARMOTORS AND DRIVES

TITLE OUTLINE – 210JM FR. DP – 'C' FACE

MAT'L.

FINISH

DRAWN	GRB 11/14/08
CHK	SK 11/14/08
APPD	
SCALE	1=4.2
REF	SS86664
FMF	
PREV	

THIS DRAWING IN DESIGN AND DETAIL IS OUR PROPERTY AND MUST NOT BE USED EXCEPT IN CONNECTION WITH OUR WORK ALL RIGHTS OF DESIGN AND INVENTION ARE RESERVED
THIS IS AN ELECTRONICALLY GENERATED DOCUMENT – DO NOT SCALE THIS PRINT

RFP

DIST LB

CAD FILE 037643

SIZE	DRAWING NO.	PAGE 1 OF 1	REV.
A	037643LE		E