SS88677LE

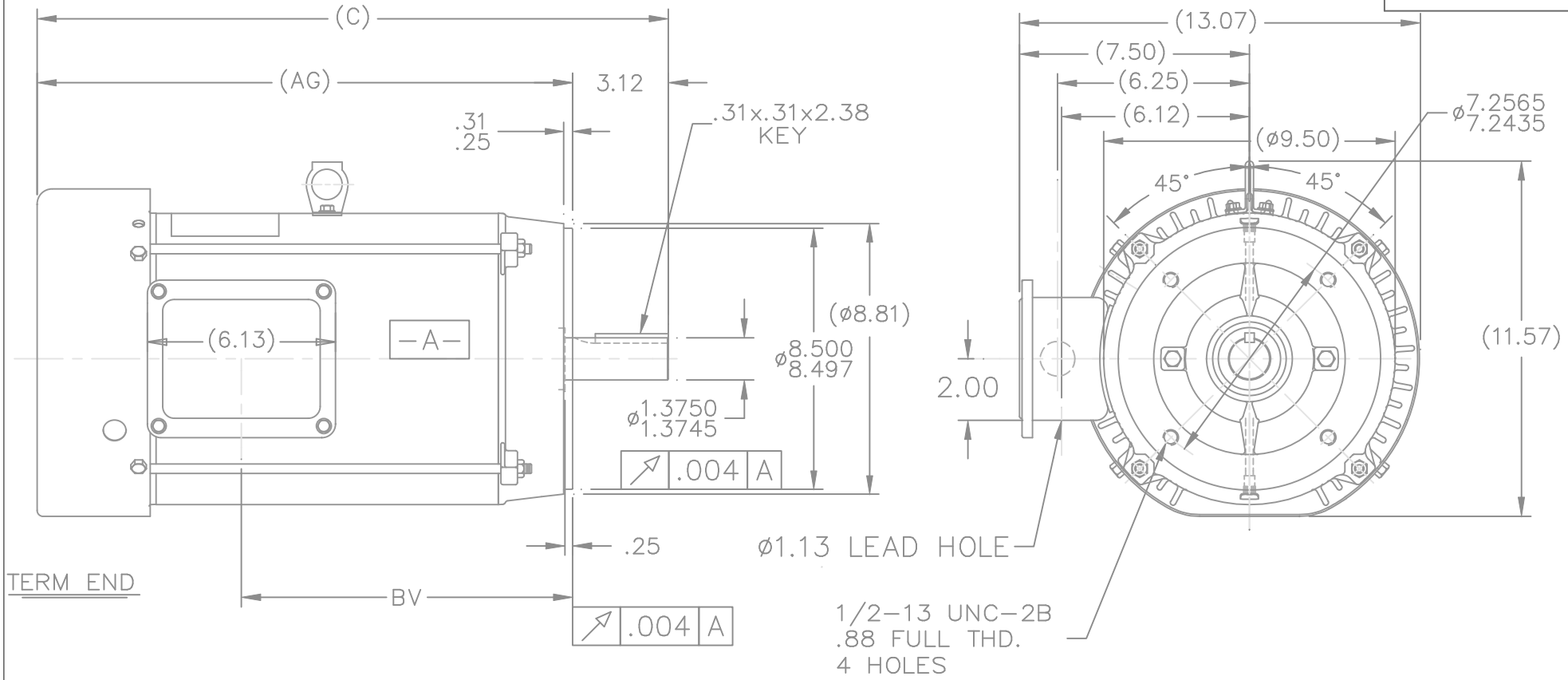

DASH	FR.	C	AG	BV	MOUNTING
965	213T	19.07	14.85	9.29	
1115	213/15T	20.57	17.45	10.79	
1240	213/15T	21.82	18.70	12.04	F1 ONLY

NOTES:
1. NAMEPLATE TO BE READ FROM C'BOX SIDE OF MOTOR.
2. BOX CAN BE MOUNTED ON OPPOSITE SIDE BY REMOVING BRACKETS AND TURNING FRAME 180° (EXCEPT AS NOTED.)
3. DASH 965 TO BE READ FROM OPPOSITE SHAFT END

NO.	REVISION	BY & DATE	CHK
3	ADDED NOTE 3 & REMOVED GROMMET CN 31848, 31881	DRS 10-21-2002	ML
2	REMOVED "BOX CAN BE MOUNTED IN 90 DEG STEPS" FROM NOTES. CN29200-2517	RJM 08-20-2002	JPL
1	NEW DRAWING	HLB 07-19-2002	TB

TOLERANCES UNLESS SPECIFIED	
DEC.	INCHES
.X	±.1
.XX	±.03
.XXX	±.005
.XXXX	±.0005
ANG	±1/2°

LEESON — ELECTRIC MOTORS GEARMOTORS AND DRIVES

TITLE OUTLINE
210 FR. – BB – TS – TEFC – R/S – C'FACE

MAT'L.

FINISH

CAD FILE SS88677LE

RFP

DIST LB-LE

DRAWN	HLB 07-16-2002
CHK	DRS 07-18-2002
APPD	TB 07-19-2002
SCALE	1=5
REF	
FMF	
PREV	

SIZE	DRAWING NO.	PAGE OF	REV.
A	SS88677LE		3

THIS DRAWING IN DESIGN AND DETAIL IS OUR PROPERTY AND MUST NOT BE USED EXCEPT IN CONNECTION WITH OUR WORK ALL RIGHTS OF DESIGN AND INVENTION ARE RESERVED
THIS IS AN ELECTRONICALLY GENERATED DOCUMENT – DO NOT SCALE THIS PRINT

10/2/2008 2:17:51 PM