SS622045LE

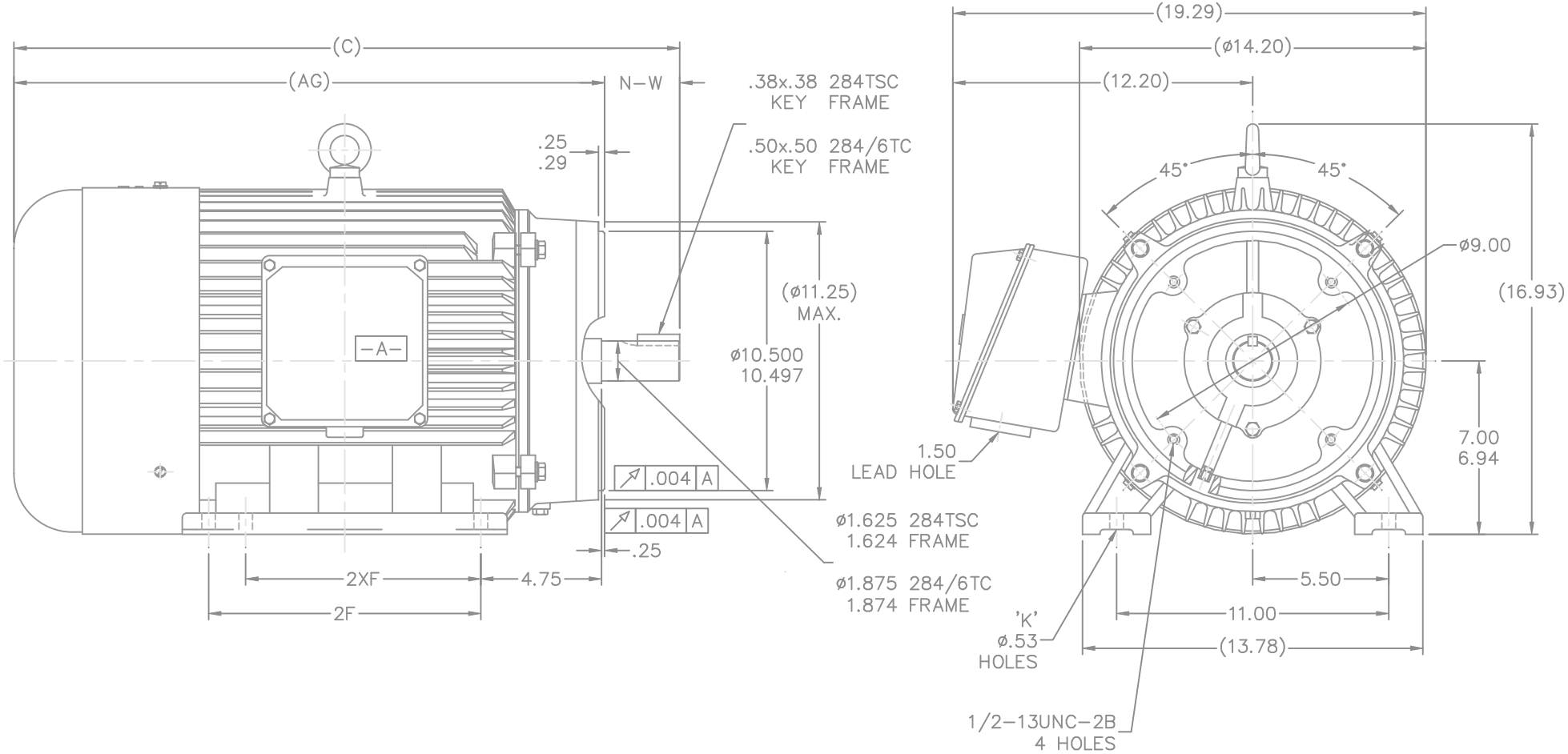

NOT DRAWN TO SCALE

---	N284TSC–2	24.88	21.63	---	9.50	---	4	3.25
---	N284TC–4	26.26	21.64	---	9.50	---	4	4.62
---	N286TC–4	27.84	23.22	---	11.00	9.50	6	4.62
DASH	FRAME	C	AG	B	2F	2XF	K	N–W

NO.	REVISION	BY & DATE	CHK

TOLERANCES UNLESS SPECIFIED

DEC.	INCHES
.X	±.1
.XX	±.03
.XXX	±.005
.XXXX	±.0005
ANG	±7'30"

LEESON — ELECTRIC MOTORS GEARMOTORS AND DRIVES

TITLE OUTLINE
284TSC, 284/286TC FR. – C'FACE

MAT'L.

FINISH

CAD FILE ss622045le

RFP

DIST LB

SIZE B

DRAWING NO. SS622045LE

PAGE OF

REV.

DRAWN MSG 08–11–2005

CHK ML 08–12–2005

APPD LMC 08–24–2005

SCALE 1=2

REF

FMF

PREV 250014140–60

THIS DRAWING IN DESIGN AND DETAIL IS OUR PROPERTY AND MUST NOT BE USED EXCEPT IN CONNECTION WITH OUR WORK ALL RIGHTS OF DESIGN AND INVENTION ARE RESERVED
THIS IS AN ELECTRONICALLY GENERATED DOCUMENT – DO NOT SCALE THIS PRINT