169549-60

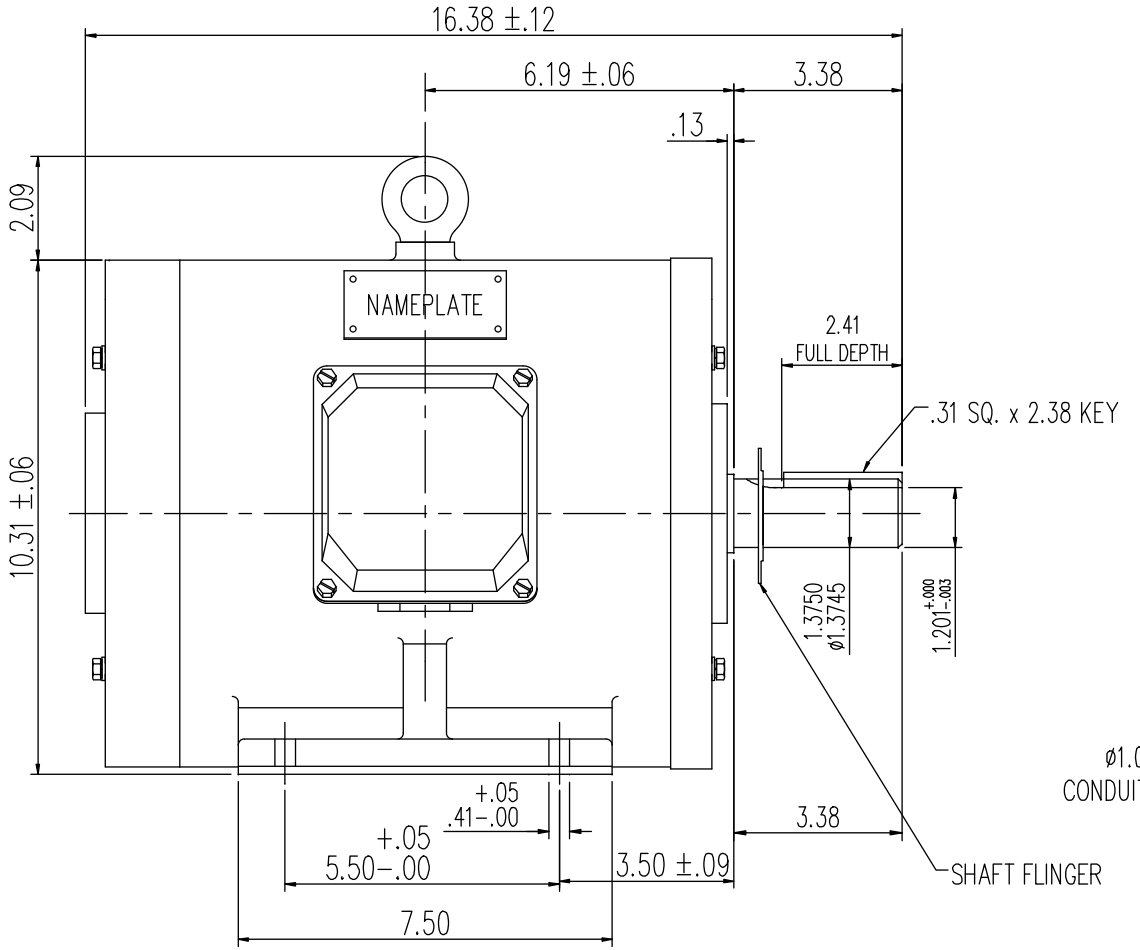

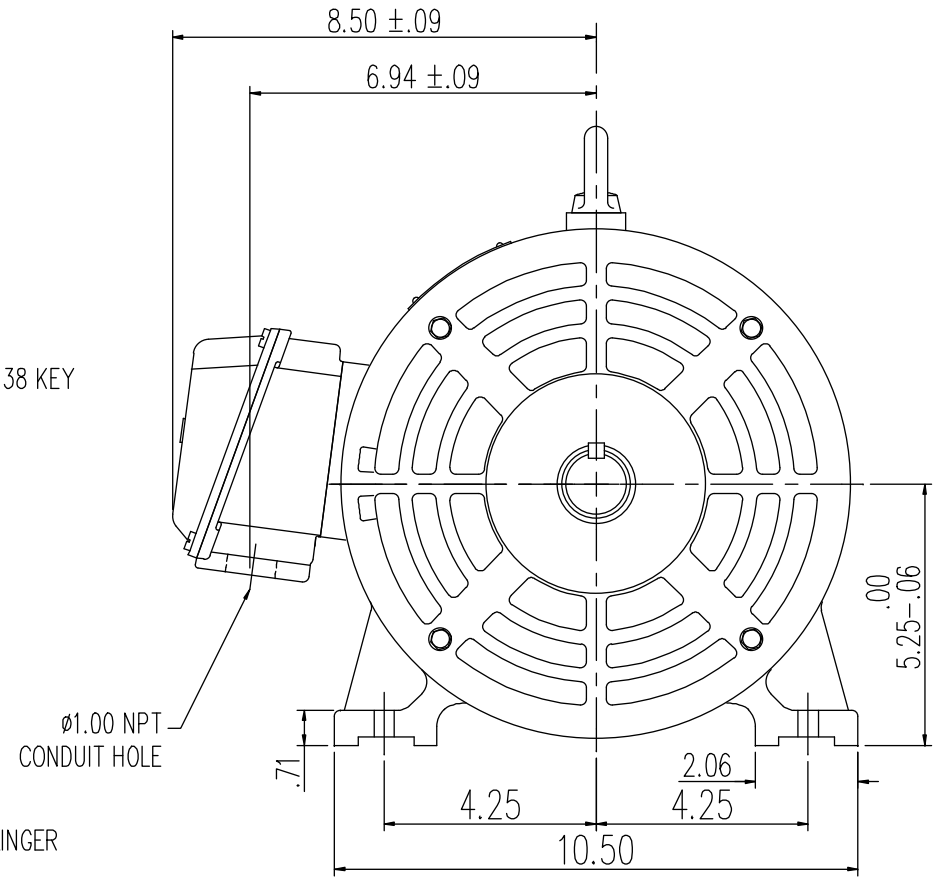

			TOLERANCES UNLESS SPECIFIED		REGAL — REGAL-BELOIT CORPORATION	DRAWN	DRZ 03/21/01
			DEC.	INCHES		CHK	
			.X	±.1		APPD	
			.XX	±.03	TITLE OUTLINE–213T FRAME	SCALE	1=1
			.XXX	±.005	ODP, RIGID MOUNT,NEW CON–BOX	REF	169515
A	REVISED TO NEW BORDER FORMAT	DWF 12/14/01	.XXXX	±.0005	MAT'L. CAST IRON	FMF	
NO.	REVISION	BY & DATE	CHK ANG	±1/2	FINISH	PREV	

THIS DRAWING IN DESIGN AND DETAIL IS OUR PROPERTY AND MUST NOT BE USED EXCEPT IN CONNECTION WITH OUR WORK ALL RIGHTS OF DESIGN AND INVENTION ARE RESERVED
THIS IS AN ELECTRONICALLY GENERATED DOCUMENT – DO NOT SCALE THIS PRINT

RFP
DIST
CAD FILE 16954960
SIZE B
DRAWING NO. 169549–60
REV. A

8/27/2013 1:44:52 PM - Converted by Connexus