169562-60

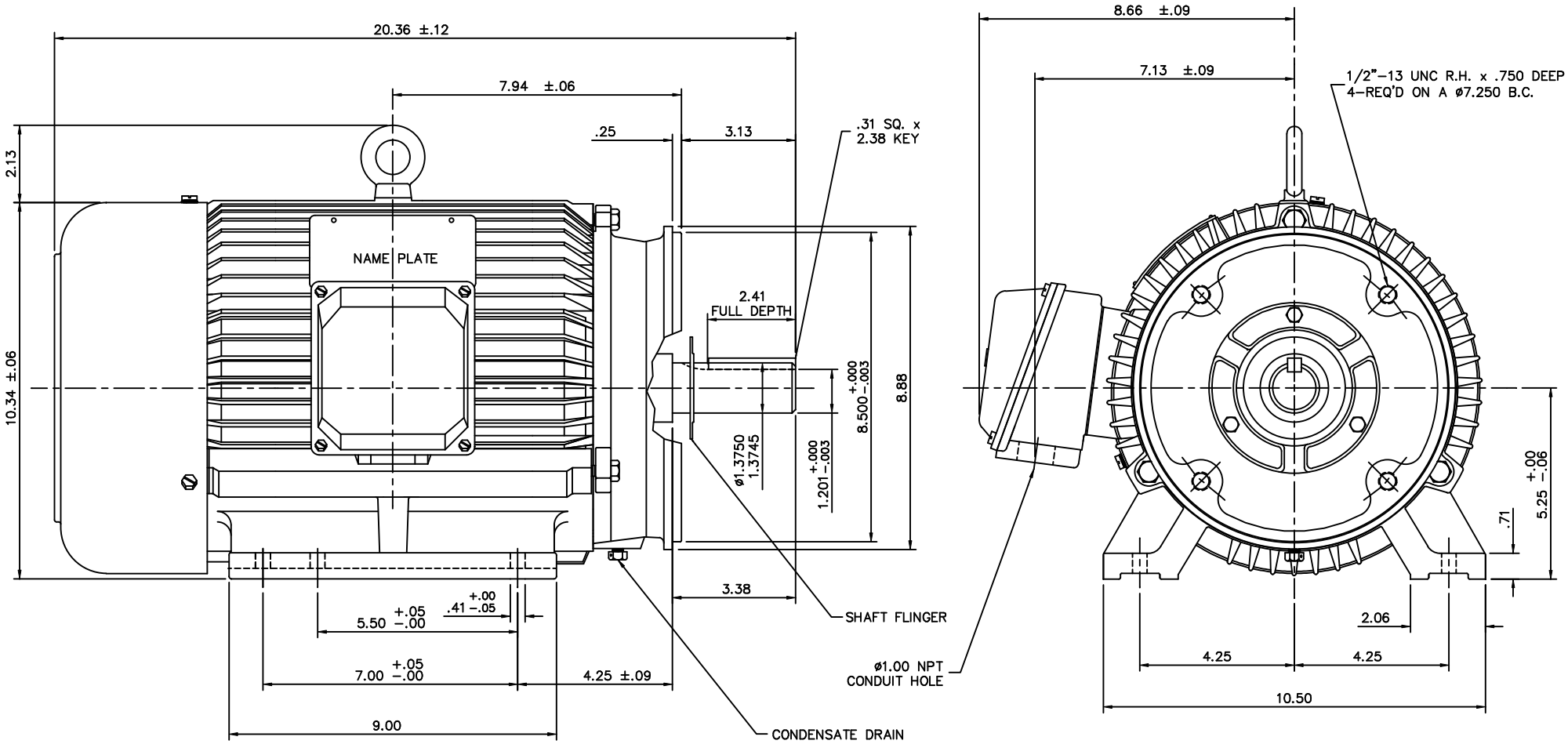

NO.	REVISION	BY & DATE	CH'K'D.
01	REDRAWN TO CURRENT CAD STANDARDS	CJK 9/17/01	

THIS DRAWING IN DESIGN AND DETAIL IS OUR PROPERTY AND MUST NOT BE USED EXCEPT IN CONNECTION WITH OUR WORK ALL RIGHTS OF DESIGN AND INVENTION ARE RESERVED
THIS IS AN ELECTRONICALLY GENERATED DOCUMENT – DO NOT SCALE THIS PRINT

TOLERANCES UNLESS OTHERWISE SPECIFIED

DEC.	INCHES	METRIC
.X	±.1	±2.5
.XX	±.03	±.76
.XXX	±.005	±.127
.XXXX	±.0005	±.0127
FRACTIONS	±1/64	
ANGLES	±1/2°	

LEESON ELECTRIC CORPORATION

DRAWN DRZ 04/06/01
APPR.
R.F.P.
SCALE 3=8
REF.
FMF

TITLE: OUTLINE – 215T FRAME, TEFC RIGID "C–FACE", NEW CON–BOX
MAT'L.: CAST IRON
FINISH: HEBEI
REV.: 01
DRAWING NO.: 169562–60