OL191492

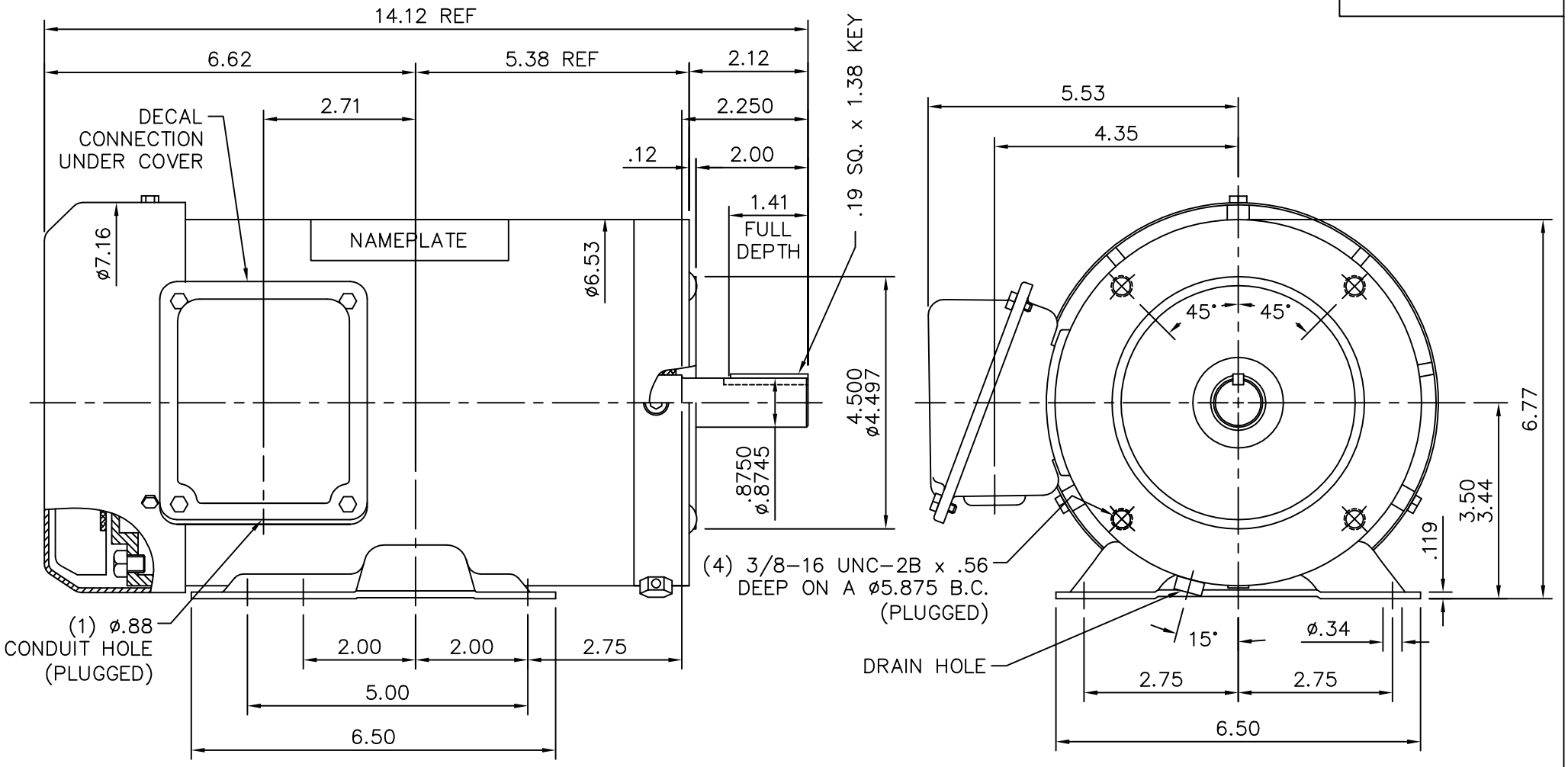

MAXIMUM FACE RUNOUT TO BE .004 T.I.R.
MAXIMUM PILOT ECCENTRICITY .004 T.I.R.
PERMISABLE SHAFT RUNOUT .002 T.I.R.

GASKETS THROUGHOUT

NO.	REVISION	BY & DATE	CHK

TOLERANCES UNLESS SPECIFIED	
DEC.	INCHES
.X	±.1
.XX	±.03
.XXX	±.005
.XXXX	±.0005
ANG	±1/2°

LEESON — ELECTRIC MOTORS GEARMOTORS AND DRIVES

TITLE: OUTLINE – 143–145TC FRAME TEFC – RIGID "C"

MAT'L.

FINISH

DRAWN	KJH 5/6/11
CHK	
APPD	
SCALE	3=8
REF	
FMF	
PREV	

THIS DRAWING IN DESIGN AND DETAIL IS OUR PROPERTY AND MUST NOT BE USED EXCEPT IN CONNECTION WITH OUR WORK ALL RIGHTS OF DESIGN AND INVENTION ARE RESERVED
THIS IS AN ELECTRONICALLY GENERATED DOCUMENT – DO NOT SCALE THIS PRINT

RFP

DIST

CAD FILE: OL191492

SIZE: A

DRAWING NO.: OL191492

REV.