Uncontrolled Copy

REV	ECO	REV BY	DATE	APPD	DATE

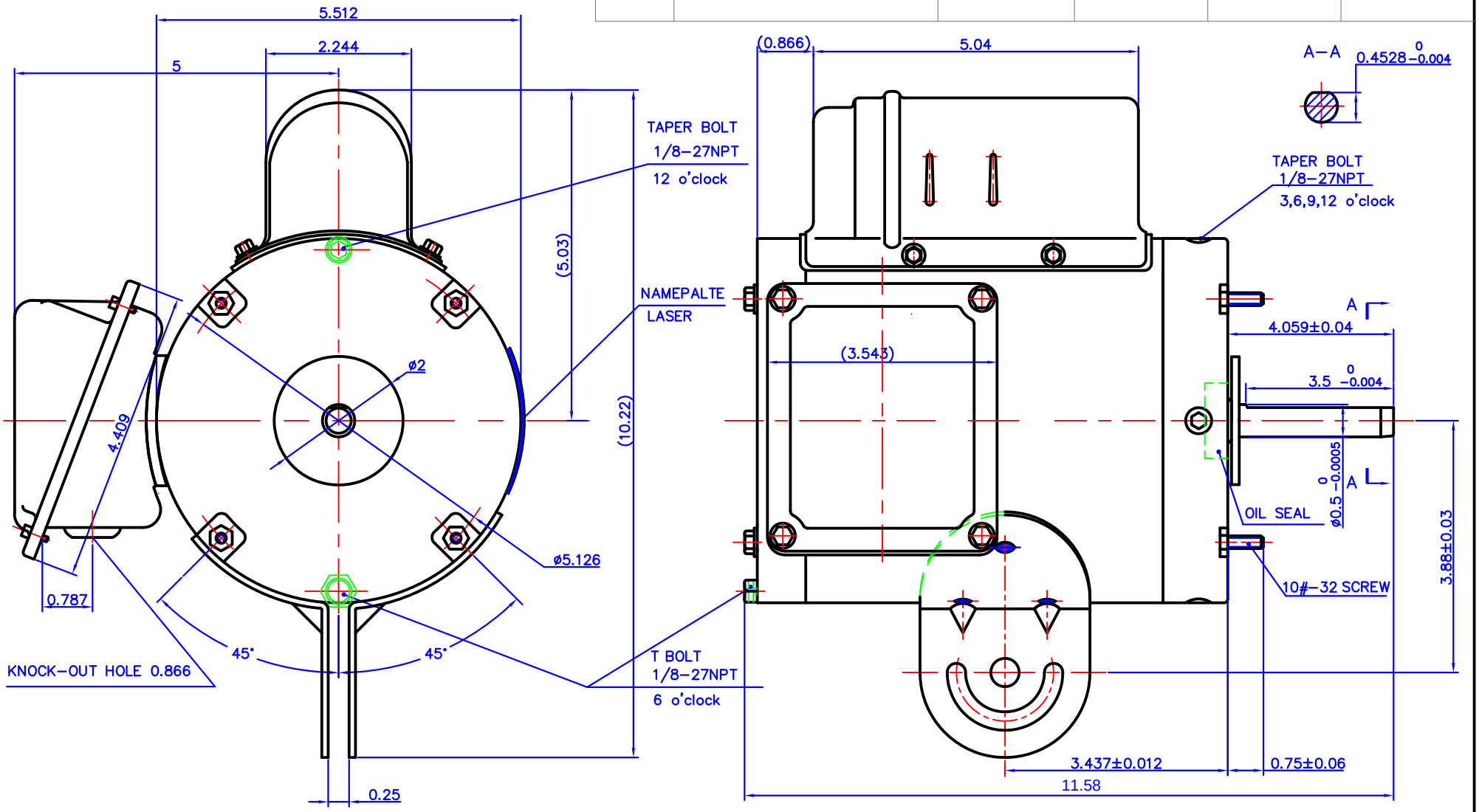

DR BY:		
APPD:		
FIRST ANGLE PROJECTION	EDS DATE	DESCRIPTION: Single Phase 48 Stainless Steel Motors
	VERSION	

CONFIDENTIAL: THIS DRAWING AND ITS INFORMATION ARE THE EXCLUSIVE AND CONFIDENTIAL PROPERTY OF AN AFFILIATE OF REGAL BELOIT CORPORATION AND ARE NOT TO BE DISCLOSED, DUPLICATED, DISTRIBUTED OR OTHERWISE USED WITHOUT THE WRITTEN CONSENT OF THE AFFILIATE OF REGAL BELOIT CORPORATION.
–ALL RIGHTS RESERVED.

SIZE A3	DWG NO OL19154400	
SCALE 1:1.5		SHEET