REV	ECO	REV BY	DATE	APPD	DATE

Uncontrolled Copy

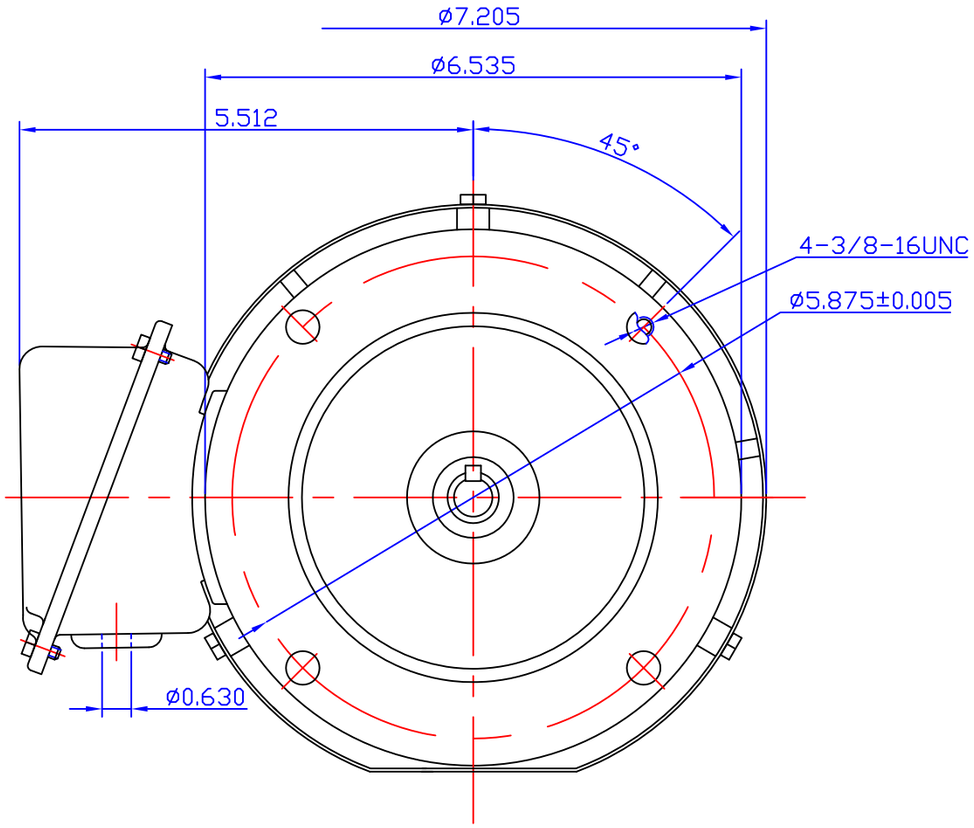

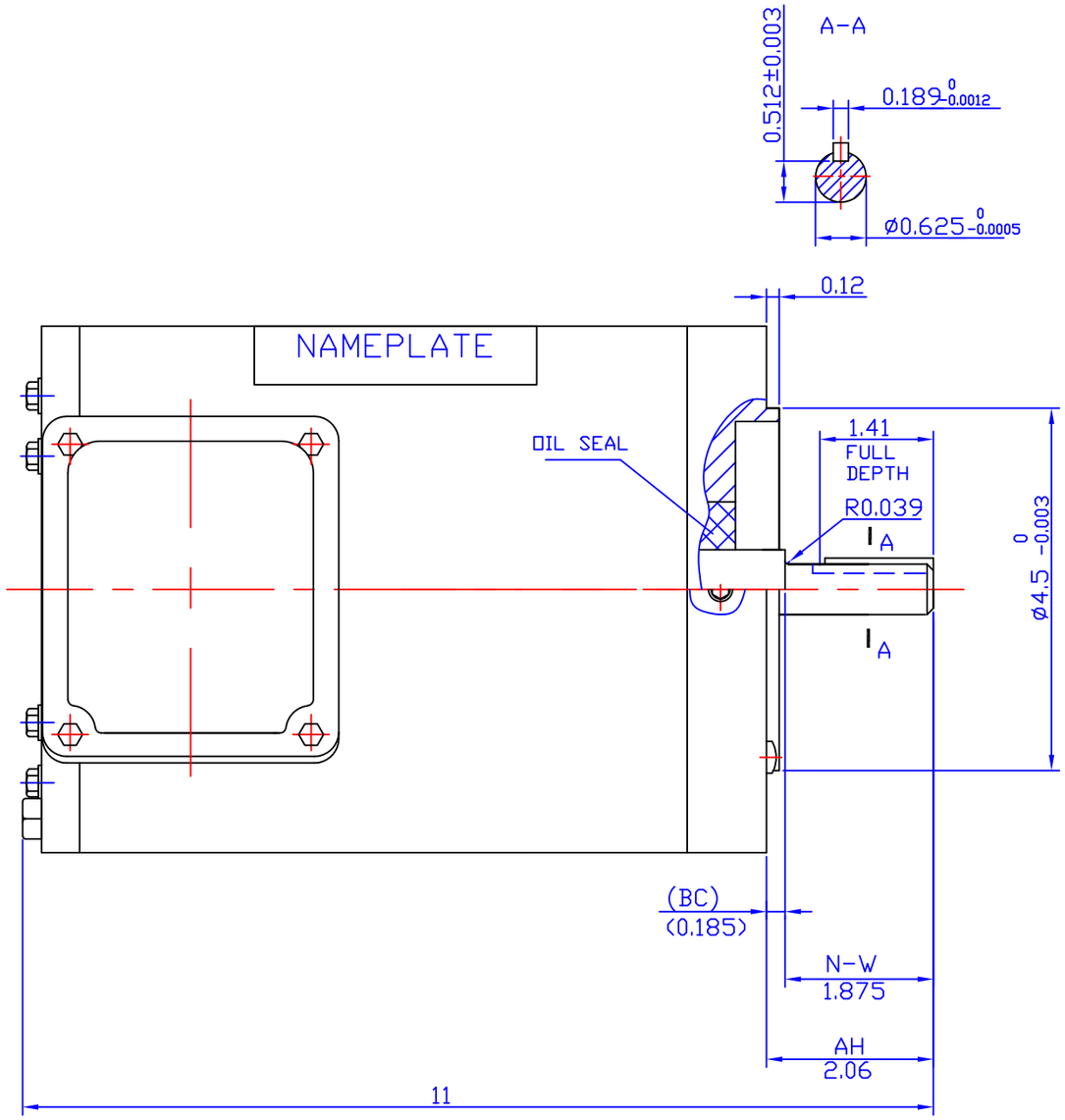

DR BY:	
APPD:	
FIRST ANGLE PROJECTION	EDS DATE
	VERSION

CONFIDENTIAL: THIS DRAWING AND ITS INFORMATION ARE THE EXCLUSIVE AND CONFIDENTIAL PROPERTY OF REGAL BELOIT CORPORATION AND ARE NOT TO BE DISCLOSED, DUPLICATED, DISTRIBUTED OR OTHERWISE USED WITHOUT THE WRITTEN CONSENT OF REGAL BELOIT CORPORATION

-ALL RIGHTS RESERVED.

REGAL REGAL-BELOIT CORPORATION

DESCRIPTION

MOTOR OUTLINE

SIZE	DWG NO	
A3	039076	
SCALE		SHEET