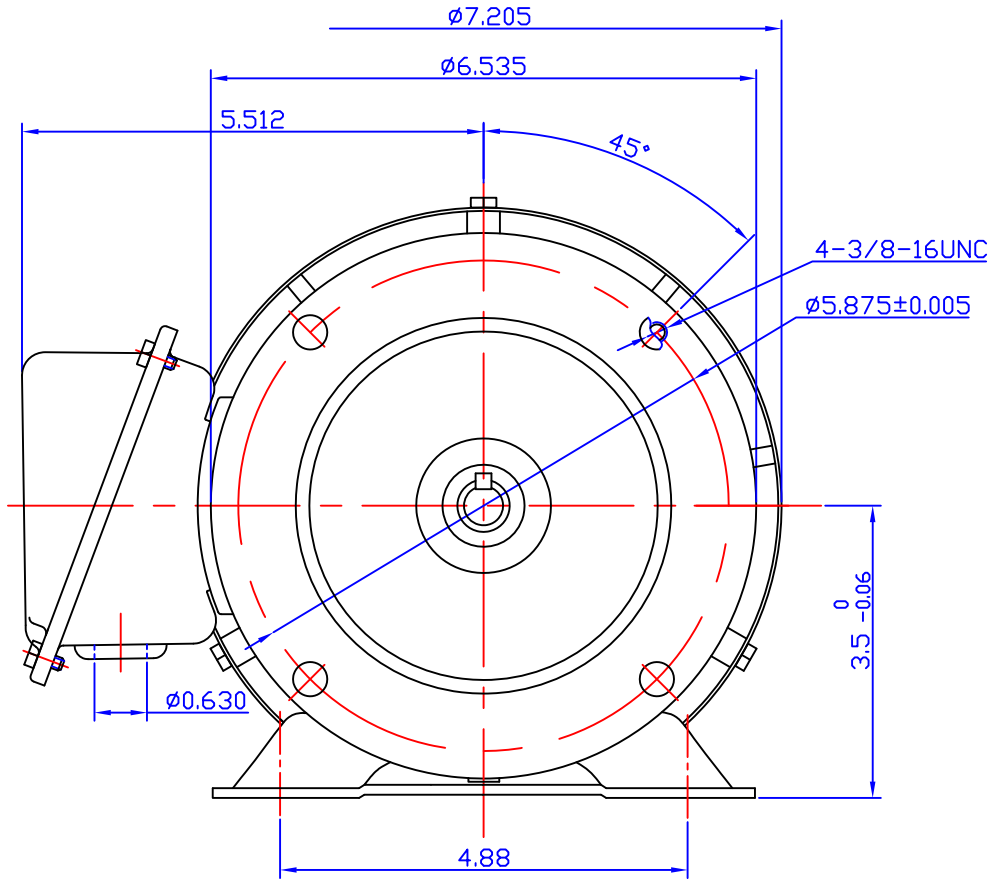

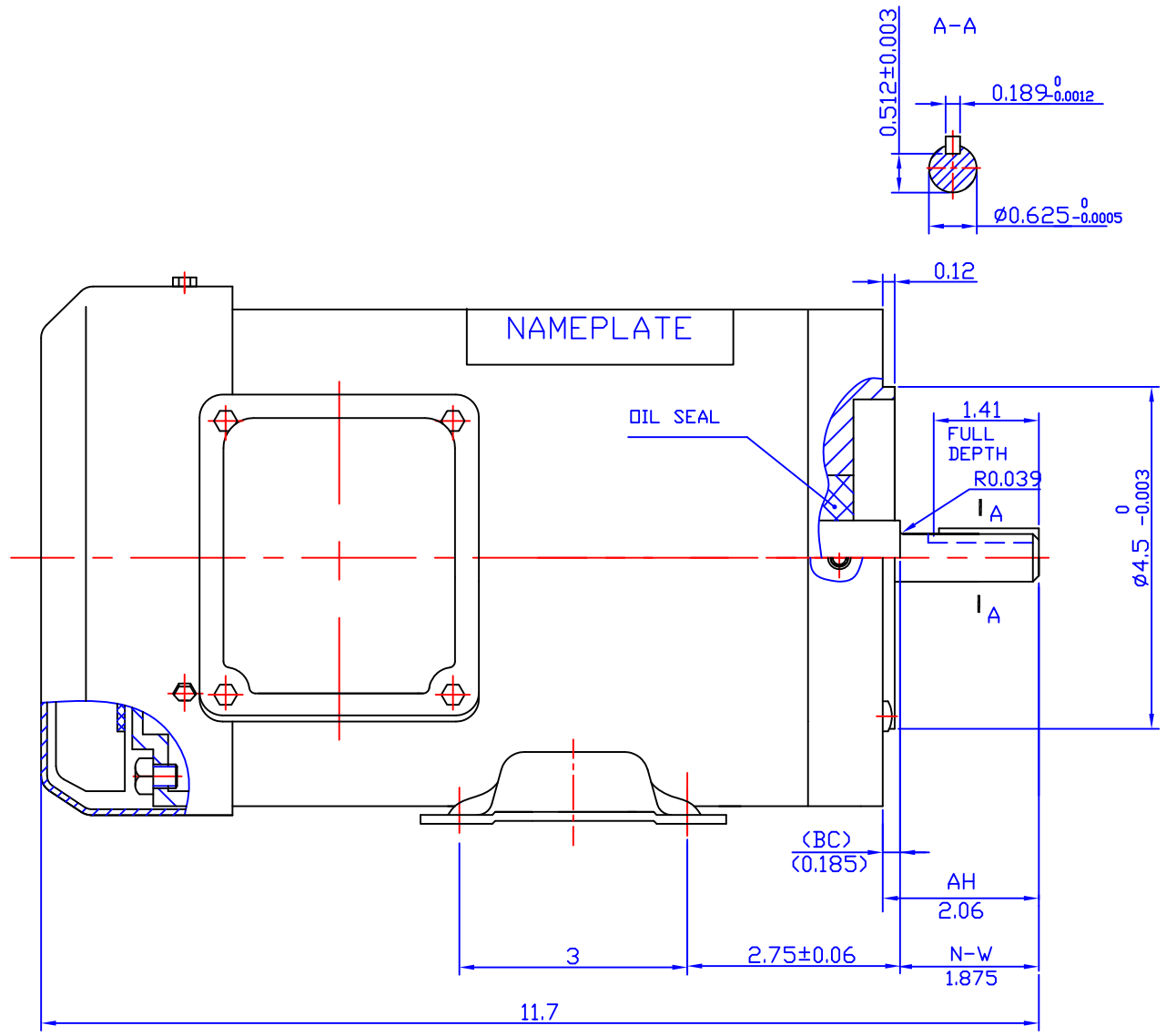

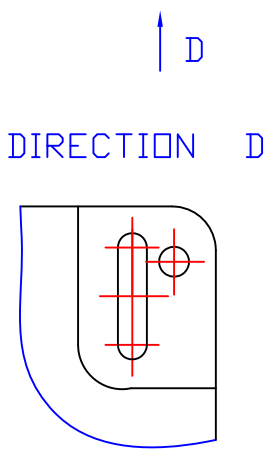

DIRECTION D

LSC NUMBER	HP	VOLT	Hz	POLE	FRAME	ENCLOSURE
191949.00	1/2	208-230/460	60	4P	56C FOOTED	TEFC
191950.00	3/4	208-230/460	60	4P	56C FOOTED	

NO.	REVISION	BY & DATE	CH'K'D.

TOLERANCES UNLESS OTHERWISE SPECIFIED

DEC.	INCHES	METRIC
.X	±.1	±2.5
.XX	±.03	±.76
.XXX	±.005	±0.127
.XXXX	±.0005	±.0127
FRACTIONS	±1/84	
ANGLES	±1/2°	

191949&191950 outline drawing

DRAWN	TITLE
APPR.	
R.F.P.	MAT'L.
SCALE	
REF.	FINISH 3.8.2012
FMF	

REV. | DRAWING NO.

THIS DRAWING IN DESIGN AND DETAIL IS OUR PROPERTY AND MUST NOT BE USED EXCEPT IN CONNECTION WITH OUR WORK ALL RIGHTS OF DESIGN AND INVENTION ARE RESERVED
THIS IS AN ELECTRONICALLY GENERATED DOCUMENT - DO NOT SCALE THIS PRINT