169862-00

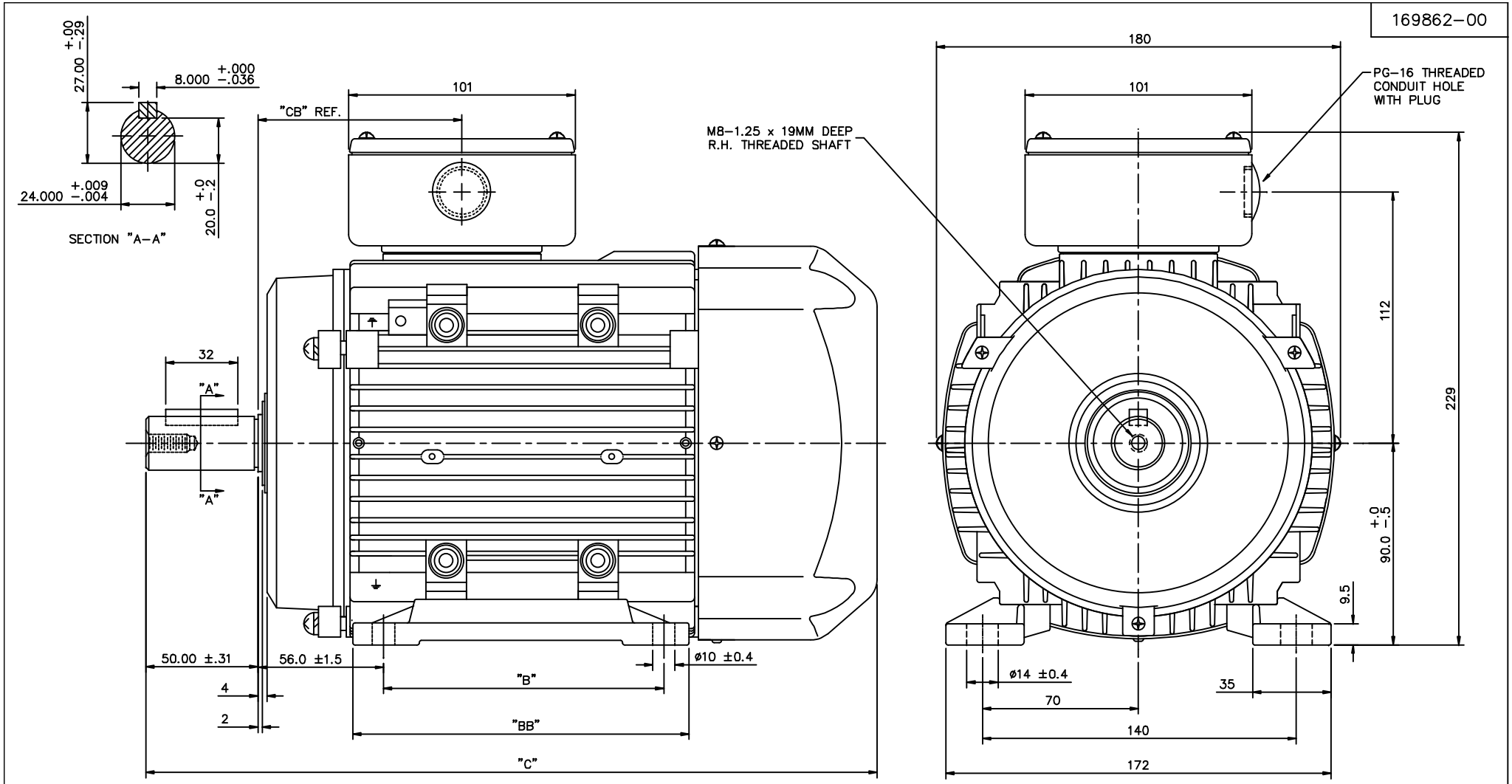

FRAME DESIGN	"B"	"BB"	"CB"	"C"
90L	125±0.7	150	91	341
90S	100±0.7	125	79	326

NO.	REVISION	BY & DATE	CHK

TOLERANCES UNLESS SPECIFIED

DEC.	METRIC
.X	±2.5
.XX	±.76
.XXX	±.127
.XXXX	±.0127
ANG	±1/2°

MARATHON ELECTRIC

TITLE: METRIC OUTLINE, IMB3 IEC–90 FRAME

MAT'L.: ALUMINUM

FINISH

CAD FILE: 16986200

RFP

DIST

SIZE: B

DRAWING NO.: 169862–00

REV.

DRAWN: ADS 01/24/02

CHK

APPD

SCALE: 1=1.6

REF: OSVC–300–551

FMF

PREV

THIS DRAWING IN DESIGN AND DETAIL IS OUR PROPERTY AND MUST NOT BE USED EXCEPT IN CONNECTION WITH OUR WORK ALL RIGHTS OF DESIGN AND INVENTION ARE RESERVED
THIS IS AN ELECTRONICALLY GENERATED DOCUMENT – DO NOT SCALE THIS PRINT