Uncontrolled Copy

SS620662

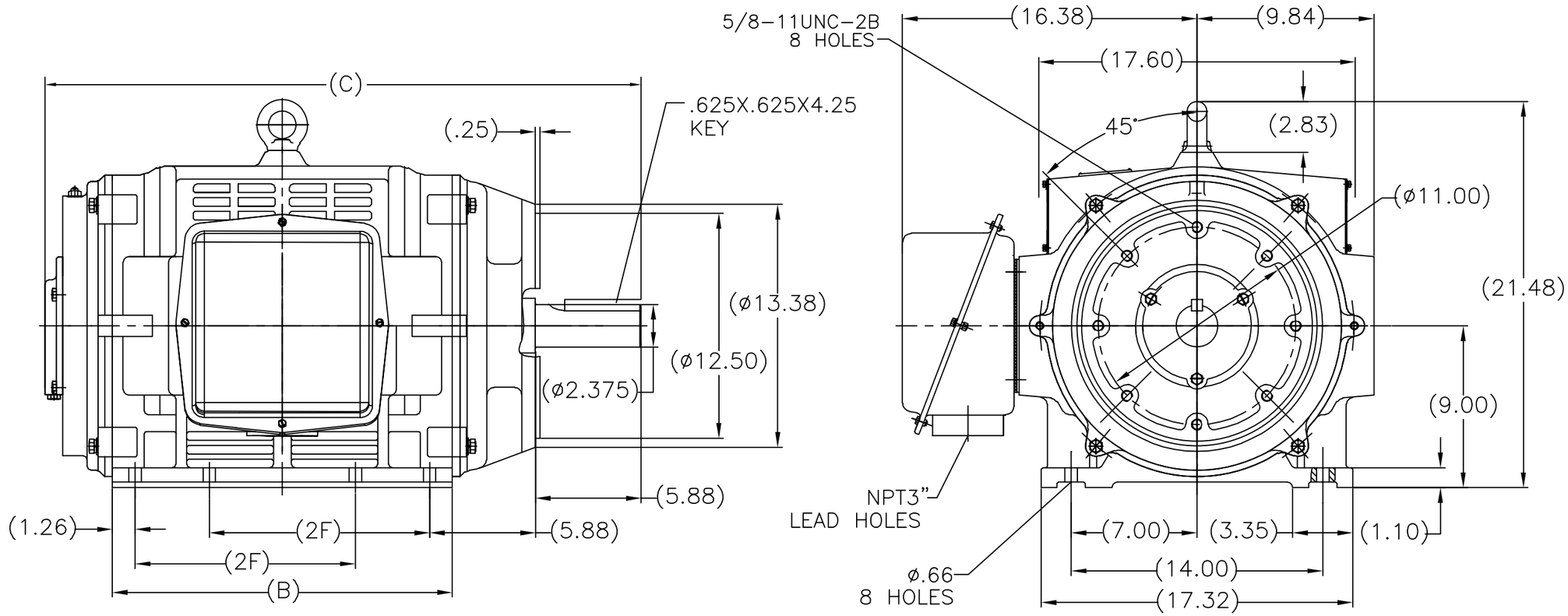

(DRAWING MAY NOT BE TO SCALE)

364TC	31.69	16.93	11.25
365TC	33.27	18.51	12.25
FRAME	C	B	2F

NO.	REVISION	BY & DATE	CHK
1	REVISED DIM's PER. ECO-0050387	RFH 04/28/2014	

TOLERANCES UNLESS SPECIFIED

DEC.	INCHES
.X	±.1
.XX	±.03
.XXX	±.005
.XXXX	±.0005
ANG	±1/5'

REGAL — REGAL - BELOIT CORPORATION

TITLE OUTLINE
364/365TC FR-ODP-CAST IRON

MAT'L.

FINISH

CAD FILE SS620662.dwg

RFP

DIST

DRAWN ZYH 04/16/2013
CHK
APPD
SCALE N/A
REF
FMF
PREV

SIZE A | DRAWING NO. SS620662 | PAGE 1 OF 1 | REV. 1

THIS DRAWING IN DESIGN AND DETAIL IS OUR PROPERTY AND MUST NOT BE USED EXCEPT IN CONNECTION WITH OUR WORK ALL RIGHTS OF DESIGN AND INVENTION ARE RESERVED
THIS IS AN ELECTRONICALLY GENERATED DOCUMENT – DO NOT SCALE THIS PRINT