XH1D1CC4

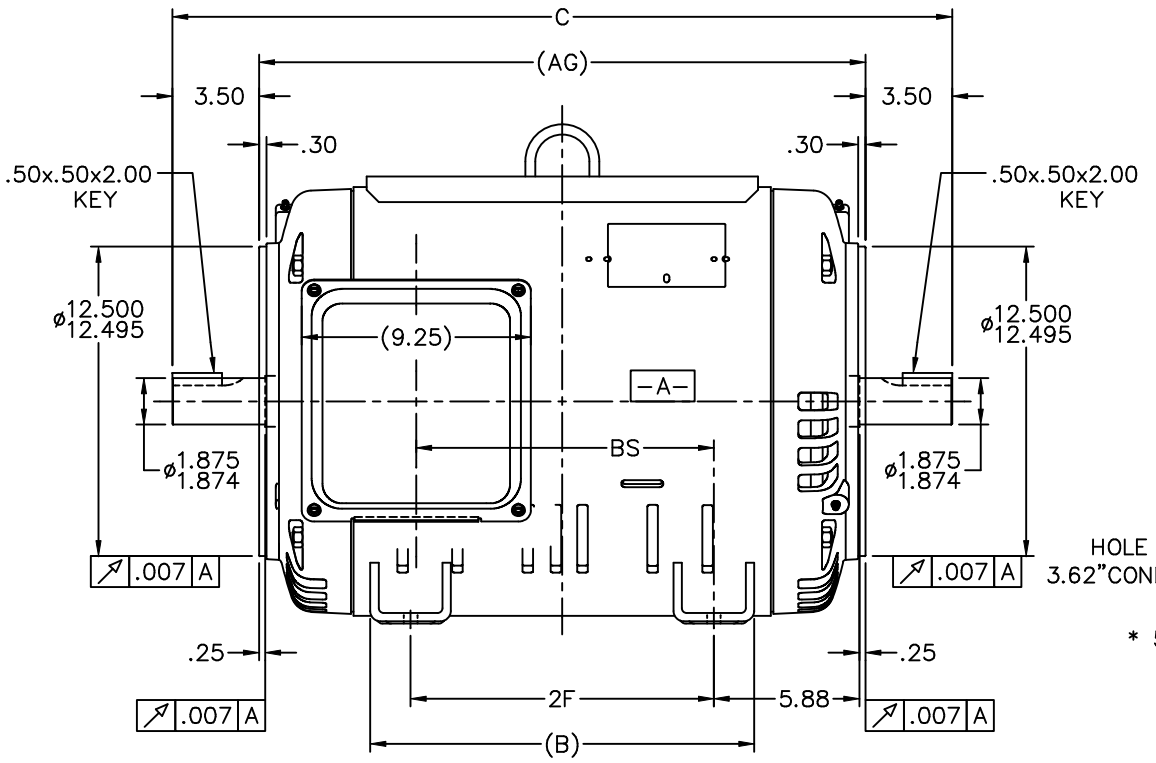

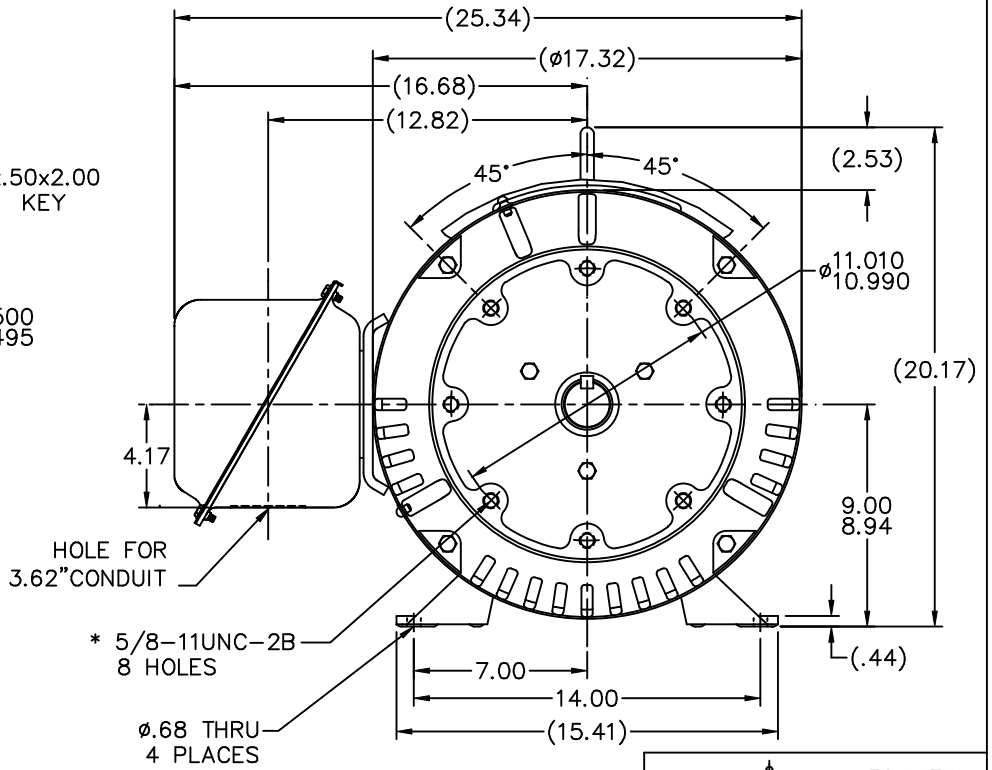

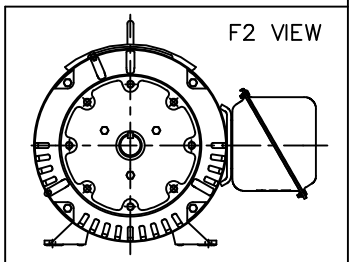

NOTES:
1. CONDUIT BOX CAN BE ROTATED IN 90° STEPS.
2. NAMEPLATES TO BE READ FROM CONDUIT BOX SIDE OF MOTOR.

* TYPICAL HOLE PATTERN BOTH ENDS.

DASH	FRAME	C	B	2F	BS	AG		
1548	364TSC	30.50	14.61	11.25	11.02	23.50		
1648	365TSC	31.50	15.61	12.25	12.02	24.50		

NO.	REVISION	BY & DATE	CHK

TOLERANCES UNLESS SPECIFIED

DEC.	INCHES
.X	±.1
.XX	±.03
.XXX	±.005
.XXXX	±.0005
ANG	±7'30"

Lincoln MOTORS

TITLE OUTLINE, 360 TSC ODP
ST. EFF. – DOUBLE C'FACE

MAT'L.
FINISH
CAD FILE xh1d1cc4

RFP 09–16–2005
DIST BY

DRAWN RJW 09–07–2005
CHK ML 09–07–2005
APPD LC 09–16–2005
SCALE 1=5
REF
FMF MU68438
PREV

SIZE B | DRAWING NO. XH1D1CC4 | PAGE OF | REV.

THIS DRAWING IN DESIGN AND DETAIL IS OUR PROPERTY AND MUST NOT BE USED EXCEPT IN CONNECTION WITH OUR WORK ALL RIGHTS OF DESIGN AND INVENTION ARE RESERVED
THIS IS AN ELECTRONICALLY GENERATED DOCUMENT – DO NOT SCALE THIS PRINT