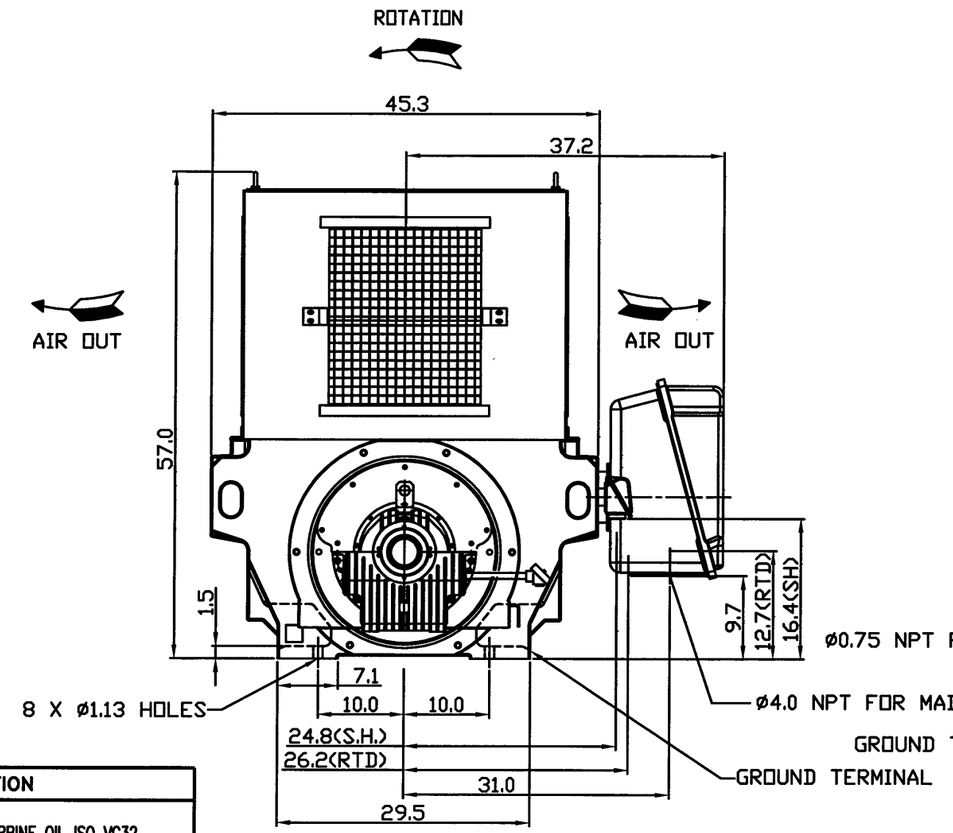

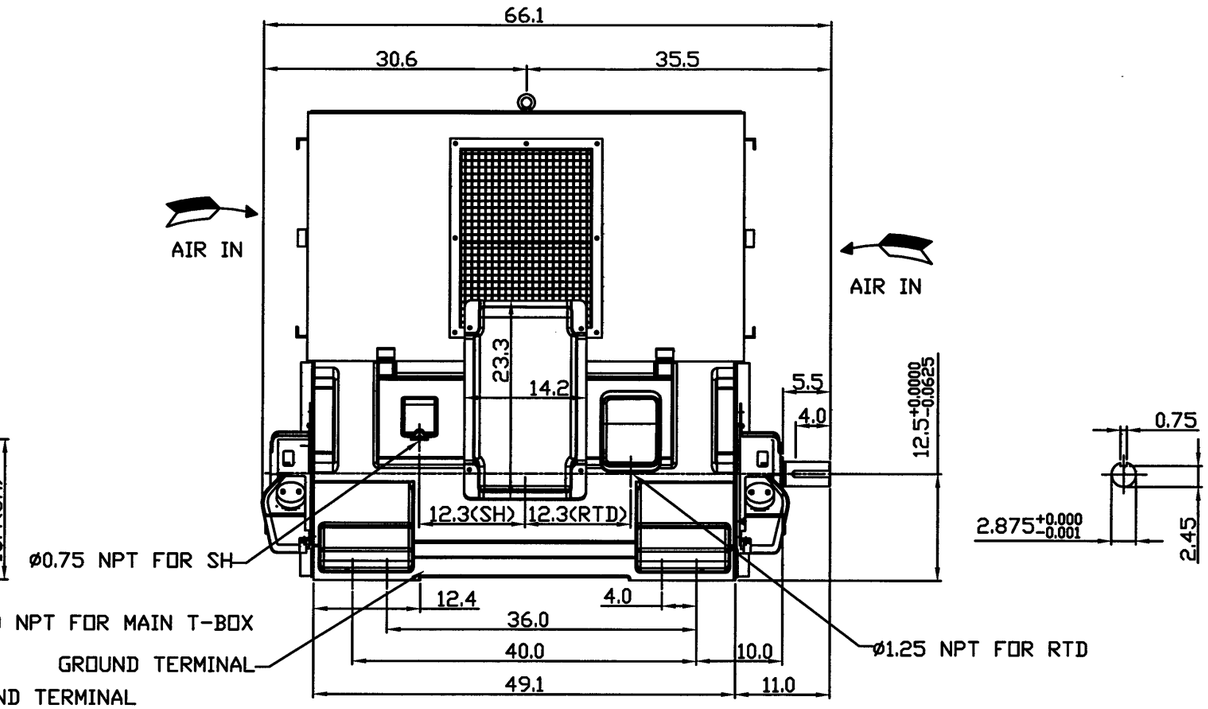

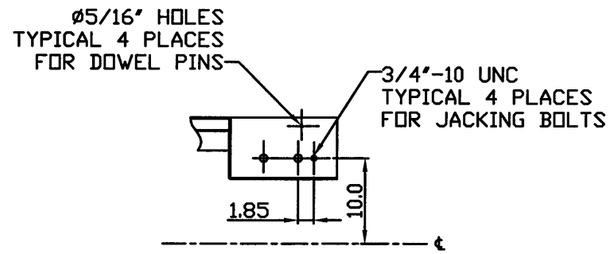

TECHNICAL INFORMATION

1. BEARING LUBRICATION DE: TURBINE OIL ISO VG32
   ODE: TURBINE OIL ISO VG32
2. BEARING TYPE DE: M9-90-INS
   ODE: M9-90-INS
3. WINDING TEMP. DETECTORS
   NUMBER AND TYPE: 6xRTD(Pt0°C-100ohm)
   LOCATION: IN STATOR SLOT
4. BEARING TEMP. DETECTORS
   NUMBER AND TYPE: _____
5. SPACE HEATER 1 PHASE
   VOLTS: 120 WATTS: 400
6. ROTATION: CCW VIEWED FROM NON DRIVE END
   THIS MOTOR IS UNI DIRECTIONAL
7. MOTOR PAINT COLOR: _____
8. APPROX. WEIGHT: 5100 Lbs
9. ACCESORIES:

DRAWING LIST

MAIN TERMINAL BOX

AUX TERMINAL BOX FOR

SPACE HEATER	
R.T.D.	
THERMISTOR	
PRODUCTION #	

NO.	REVISION	BY	DATE
0	FIRST ISSUE	TZ	3/8/05

MOTOR OUTLINE FOR THREE PHASE INDUCTION MOTOR

CUSTOMER NAME	P.O. NO.	MOTOR TAG NO.

OUTPUT	POLE	VOLTAGE	FREQUENCY	FULL LOAD SPEED	TOSHIBA MODEL NO.
HP	2	2300/4000 V	60 Hz	(min^{-1})	

TYPE	FORM	INS. CLASS	RATING	FRAME	S.F.	ENCLOSURE
		F	CONT.	5011/12	1.15	WP-II

TOSHIBA INTERNATIONAL CORPORATION
HOUSTON, TEXAS U.S.A.

3rd ANGLE PROJ.	PREPARED BY:	DATE:	CHECKED BY:	DATE:	DRAWING NO.:	REV.
	T. ZIEBRO	3/8/05			MDSL0087-07	0

Issued Date	4/23/2015	Transmit #	
Issued By	dschoeck	Issued Rev	

TOSHIBA
Leading Innovation >>>

TYPICAL MOTOR PERFORMANCE DATA

Model: 4003WTQK11F-C

HP	kW	Pole	FL RPM	Frame	Voltage	Hz	Phase	FL Amps
400	298	2	3576	5012USS	4000	60	3	54
Enclosure	**IP**	**Ins. Class**	**S.F.**	**Duty**	**NEMA Nom. Eff.**	**NEMA Design**	**kVA Code**	**Ambient (°C)**
WP-II	24	F	1.15	CONT	93.3	B	F	40 C

Load	HP	kW	Amperes	Efficiency (%)	Power Factor (%)
Full Load	400	298.3	53.5	93.3	86.1
¾ Load	300.00	223.7	41.8	92.9	83.1
½ Load	200.00	149.1	31.1	91.5	75.5
¼ Load	100.00	74.6	22.6	87.1	54.7
No Load			14.0		9.8
Locked Rotor			291.70		19.3

Torque				Rotor wk² Inertia
Full Load (lb-ft)	Locked Rotor (% FLT)	Pull Up (% FLT)	Break Down (% FLT)	(lb-ft²)
587	85	90	260	81.10

Safe Stall Time(s)		Sound Pressure dB(A) @ 1M	Bearings*		Approx. Motor Weight (lbs)
Cold	Hot		DE	NDE	
35.1	27.4	-	M9-90 INS	M9-90 INS	

*Bearings are the only recommended spare part(s).

Motor Options:
Product Family:WP-II
Mounting:Footed,Shaft:USS Shaft

Customer	
Customer PO	
Sales Order	
Project #	

Tag:

All characteristics are average expected values.

TOSHIBA INTERNATIONAL CORPORATION · HOUSTON, TEXAS U.S.A.

Engineering	bmammen	Doc. Written By	D. Suarez	Doc.# / Rev	MPCF-1119 / 0
Engr. Date	7/14/2014	Doc. Approved By	M. Campbell	Doc. Issued	6/8/2011

Issued Date	4/23/2015	Transmit #	
Issued By	dschoeck	Issued Rev	

TOSHIBA
Leading Innovation >>>

SPEED TORQUE/CURRENT CURVE

Model: 4003WTQK11F-C

HP	kW	Pole	FL RPM	Frame	Voltage	Hz	Phase	FL Amps
400	298	2	3576	5012USS	4000	60	3	54
Enclosure	**IP**	**Ins. Class**	**S.F.**	**Duty**	**NEMA Nom. Eff.**	**NEMA Design**	**kVA Code**	**Ambient (°C)**
WP-II	24	F	1.15	CONT	93.3	B	F	40 C

Locked Rotor Amps	Rotor wk² Inertia (lb-ft²)	Torque			
		Full Load (lb-ft)	Locked Rotor (%)	Pull Up (%)	Break Down (%)
291.70	81.10	587	85	90	260

Design Values

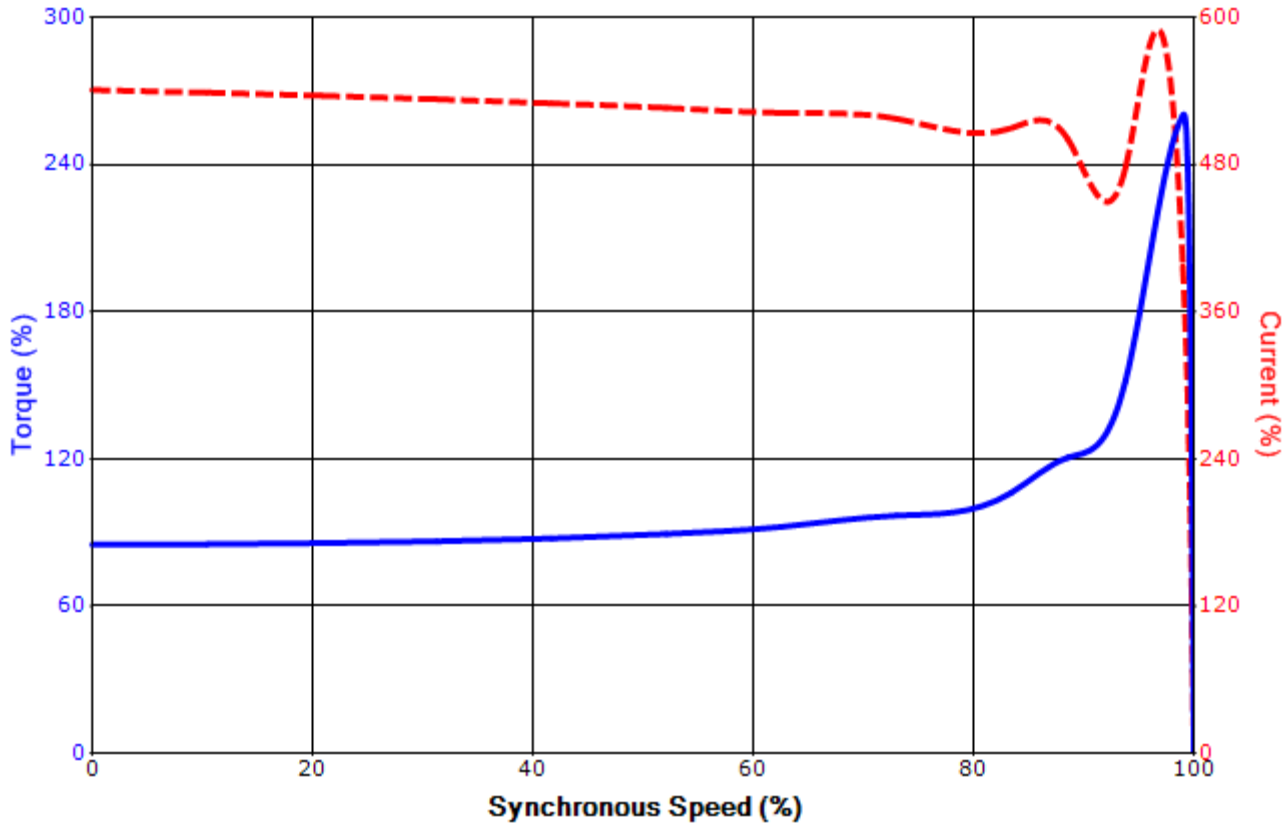

Customer			**wk² Load Inertia (lb-ft²)**	-
Customer PO			**Load Type**	-
Sales Order			**Voltage (%)**	100
Project #			**Accel. Time**	-

Tag:

All characteristics are average expected values.

TOSHIBA INTERNATIONAL CORPORATION · HOUSTON, TEXAS U.S.A.

Engineering	bmammen	**Doc. Written By**	D. Suarez	**Doc.# / Rev**	MPCF-1121 / 0
Engr. Date	7/14/2014	**Doc. Approved By**	M. Campbell	**Doc. Issued**	6/8/2011