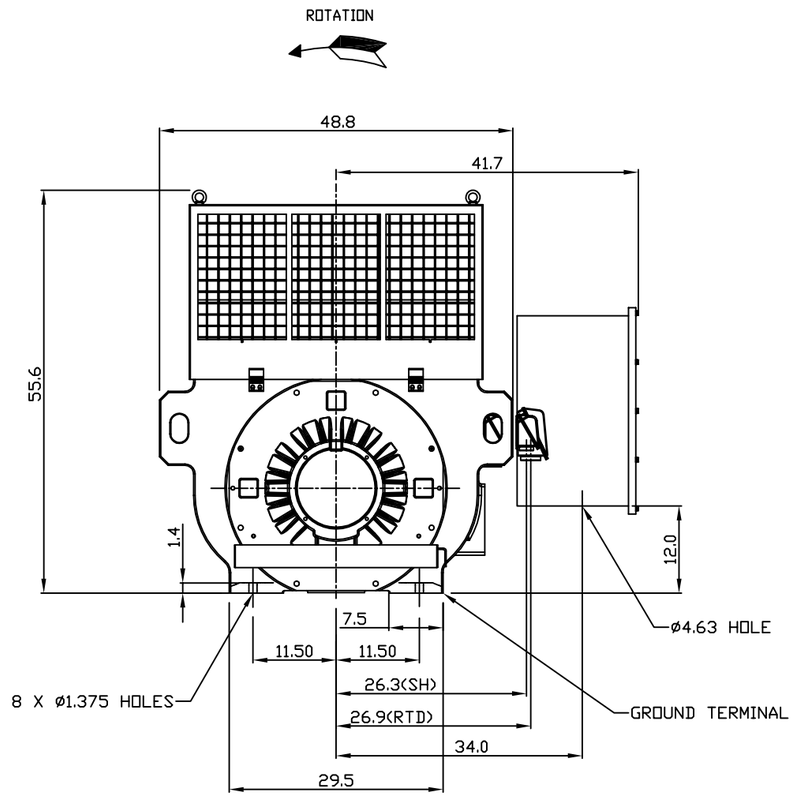

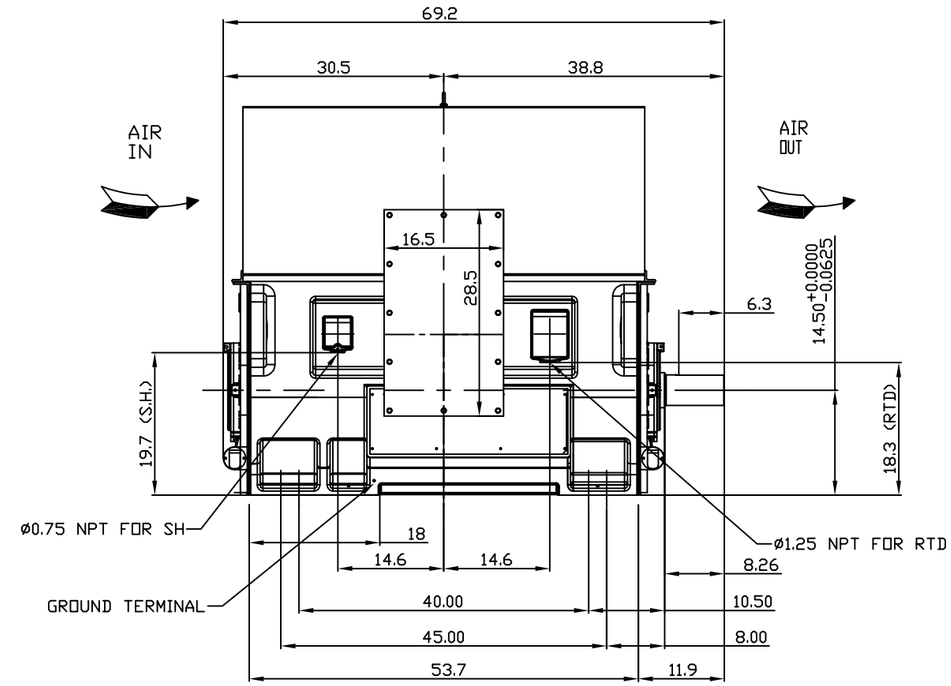

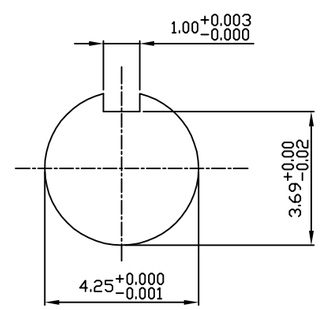

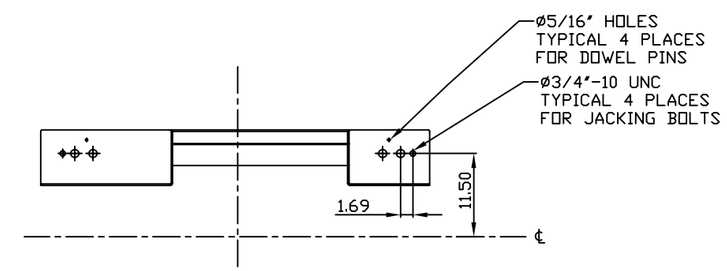

TECHNICAL INFORMATION

1. BEARING LUBRICATION DE: Mobil Polyrex EM
   ODE: Mobil Polyrex EM
2. BEARING TYPE DE: 6326C3
   ODE: 6326C3 INSULATED
3. WINDING TEMP. DETECTORS
   NUMBER AND TYPE: 6xRTD(Pt0°C−100ohm)
   LOCATION: IN STATOR SLOT
4. BEARING TEMP. DETECTORS
   NUMBER AND TYPE: _____
5. SPACE HEATER 1 PHASE
   VOLTS: 120 WATTS: 400
6. ROTATION: CCW VIEWED FROM NON DRIVE END
   THIS MOTOR IS BI DIRECTIONAL
7. MOTOR PAINT COLOR: _____
8. APPROX. WEIGHT: 7300 Lbs
9. ACCESORIES:

DRAWING LIST

MAIN TERMINAL BOX
130−7532−02

AUX TERMINAL BOX FOR	
SPACE HEATER	130−7520−50
R.T.D.	130−7522−51
THERMISTOR	N/A
PRODUCTION #	N/A

NO.	REVISION	BY	DATE
3	UPDATE	RWS	1/2/14
2	UPDATE	MH	8/15/05
1	UPDATE	RW	4/16/03
0	FIRST ISSUE	RW	3/25/03

MOTOR OUTLINE FOR THREE PHASE INDUCTION MOTOR

CUSTOMER NAME	P.O. NO.	MOTOR TAG NO.

OUTPUT	POLE	VOLTAGE	FREQUENCY	FULL LOAD SPEED	TOSHIBA MODEL NO.
HP	6	V	Hz	(min^{-1})	

TYPE	FORM	INS. CLASS	RATING	FRAME	S.F.	ENCLOSURE
		F	CONT.	5811/12		WP−I

TOSHIBA INTERNATIONAL CORPORATION
HOUSTON, TEXAS U.S.A.

3rd ANGLE PROJ.	PREPARED BY:	DATE:	CHECKED BY:	DATE:	DRAWING NO.:	REV.
	R. WILKINS	03/25/03	M. HO	04/01/03	MDSL 0086−03	3

Issued Date	4/23/2015	Transmit #	
Issued By	dschoeck	Issued Rev	

TOSHIBA
Leading Innovation >>>

TYPICAL MOTOR PERFORMANCE DATA

Model: 7006WPAK11E-C

HP	kW	Pole	FL RPM	Frame	Voltage	Hz	Phase	FL Amps
700	522	6	1180	5812US	4000	60	3	100
Enclosure	**IP**	**Ins. Class**	**S.F.**	**Duty**	**NEMA Nom. Eff.**	**NEMA Design**	**kVA Code**	**Ambient (°C)**
WP-I	24	F	1.15	CONT	93.5	-	G	40 C

Load	HP	kW	Amperes	Efficiency (%)	Power Factor (%)
Full Load	700	522.0	99.4	93.5	81.0
¾ Load	525.00	391.5	79.2	93.5	76.3
½ Load	350.00	261.0	61.7	92.8	65.7
¼ Load	175.00	130.5	48.8	89.8	42.9
No Load			35.6		3.0
Locked Rotor			618.70		25.8

Torque				Rotor wk² Inertia
Full Load (lb-ft)	Locked Rotor (% FLT)	Pull Up (% FLT)	Break Down (% FLT)	(lb-ft²)
3116	145	125	275	373.71

Safe Stall Time(s)		Sound Pressure dB(A) @ 1M	Bearings*		Approx. Motor Weight (lbs)
Cold	Hot		DE	NDE	
9.7	4.1	-	6326C3	6326C3 INS	

*Bearings are the only recommended spare part(s).

Motor Options:
Product Family:ODP & WP-I
Mounting:Footed,Shaft:US Shaft

Customer	
Customer PO	
Sales Order	
Project #	

Tag:

All characteristics are average expected values.

TOSHIBA INTERNATIONAL CORPORATION · HOUSTON, TEXAS U.S.A.

Engineering	bmammen	Doc. Written By	D. Suarez	Doc.# / Rev	MPCF-1119 / 0
Engr. Date	7/14/2014	Doc. Approved By	M. Campbell	Doc. Issued	6/8/2011

Issued Date	4/23/2015	Transmit #	
Issued By	dschoeck	Issued Rev	

TOSHIBA
Leading Innovation >>>

SPEED TORQUE/CURRENT CURVE

Model: 7006WPAK11E-C

HP	kW	Pole	FL RPM	Frame	Voltage	Hz	Phase	FL Amps
700	522	6	1180	5812US	4000	60	3	100
Enclosure	**IP**	**Ins. Class**	**S.F.**	**Duty**	**NEMA Nom. Eff.**	**NEMA Design**	**kVA Code**	**Ambient (°C)**
WP-I	24	F	1.15	CONT	93.5	-	G	40 C

Locked Rotor Amps	Rotor wk² Inertia (lb-ft²)	Torque			
		Full Load (lb-ft)	Locked Rotor (%)	Pull Up (%)	Break Down (%)
618.70	373.71	3116	145	125	275

Design Values

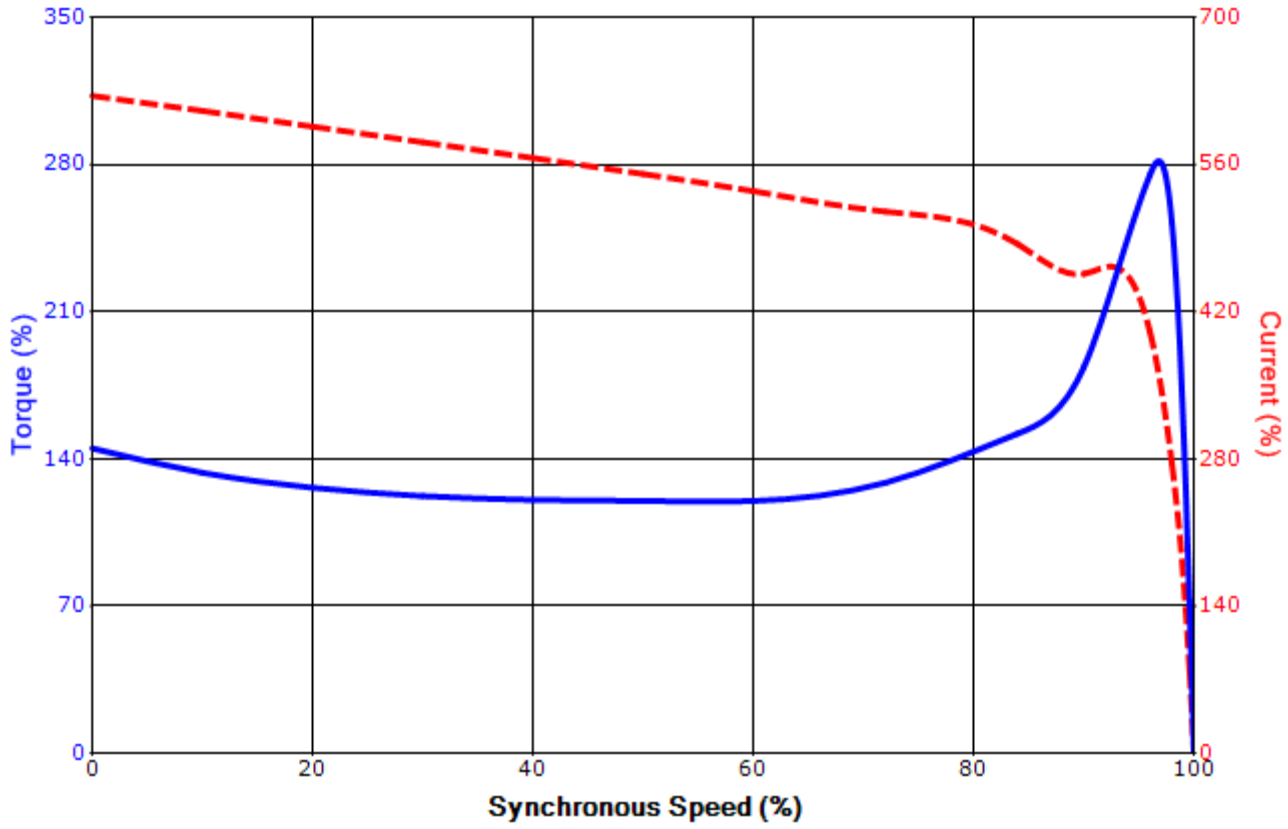

Customer			**wk² Load Inertia (lb-ft²)**	-
Customer PO			**Load Type**	-
Sales Order			**Voltage (%)**	100
Project #			**Accel. Time**	-

Tag:

All characteristics are average expected values.

TOSHIBA INTERNATIONAL CORPORATION · HOUSTON, TEXAS U.S.A.

Engineering	bmammen	**Doc. Written By**	D. Suarez	**Doc.# / Rev**	MPCF-1121 / 0
Engr. Date	7/14/2014	**Doc. Approved By**	M. Campbell	**Doc. Issued**	6/8/2011