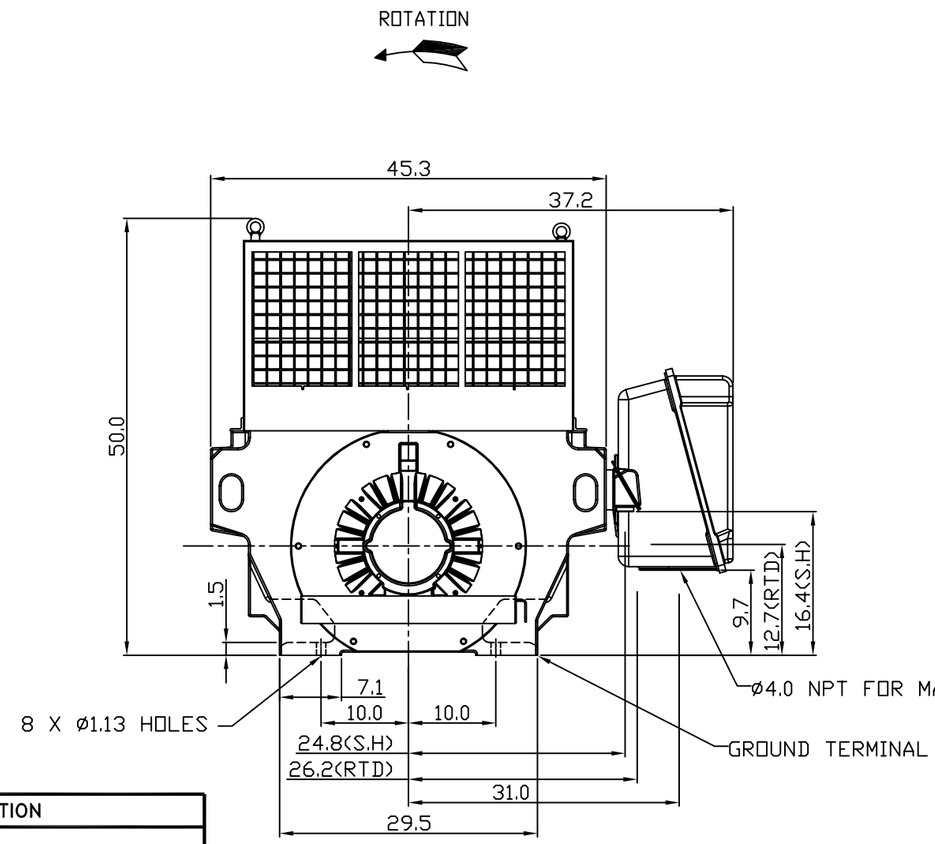

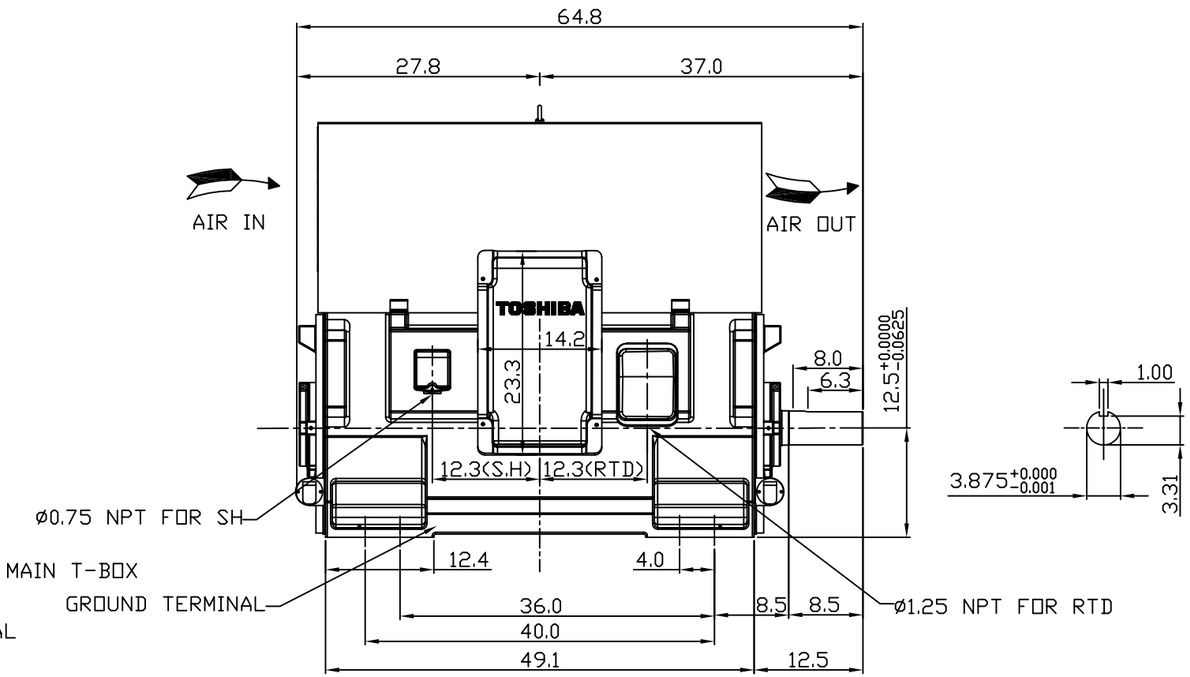

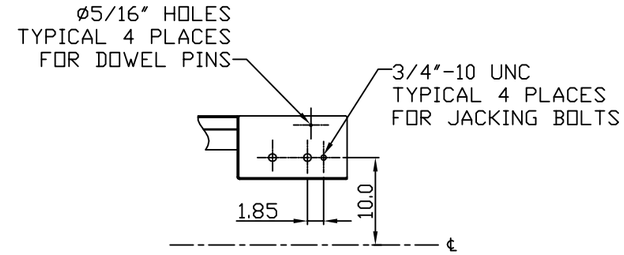

TECHNICAL INFORMATION

1. BEARING LUBRICATION DE: MOBIL POLYREX EM
   ODE: MOBIL POLYREX EM
2. BEARING TYPE DE: 6321C3
   ODE: 6321C3 (INSULATED)
3. WINDING TEMP. DETECTORS
   NUMBER AND TYPE: 6xRTD(Pt0°C–100ohm)
   LOCATION: IN STATOR SLOT
4. BEARING TEMP. DETECTORS
   NUMBER AND TYPE: N/A
5. SPACE HEATER 1 PHASE
   VOLTS: 120 WATTS: 400
6. ROTATION: CCW VIEWED FROM NON DRIVE END
   THIS MOTOR IS BI DIRECTIONAL
7. MOTOR PAINT COLOR: GRAY
8. APPROX. WEIGHT: 5000 Lbs.
9. ACCESORIES:

DRAWING LIST

MAIN TERMINAL BOX
130–7622–55

AUX TERMINAL BOX FOR	
SPACE HEATER	130–7520–50
R.T.D.	130–7522–51
THERMISTOR	–
PRODUCTION #	–
UNITS:	INCHES

NO.	REVISION	BY	DATE
1	UPDATE	RWS	1/2/14
0	FIRST ISSUE	MH	012904

MOTOR OUTLINE FOR THREE PHASE INDUCTION MOTOR

CUSTOMER NAME	P.O. NO.	MOTOR TAG NO.

OUTPUT	POLE	VOLTAGE	FREQUENCY	FULL LOAD SPEED	TOSHIBA MODEL NO.
HP		V	Hz	(min^{-1})	

TYPE	FORM	INS. CLASS	RATING	FRAME	S.F.	ENCLOSURE
		F	CONT.	5011/12US		WP–I

TOSHIBA INTERNATIONAL CORPORATION
HOUSTON, TEXAS U.S.A.

3rd ANGLE PROJ.	PREPARED BY:	DATE:	CHECKED BY:	DATE:	DRAWING NO.:	REV.
	M.HO	012904	D. HENSLEY	012904	MDSL0086–06	1

Issued Date	4/23/2015	Transmit #	
Issued By	dschoeck	Issued Rev	

TOSHIBA
Leading Innovation >>>

TYPICAL MOTOR PERFORMANCE DATA

Model: 8004WPAK11E-C

HP	kW	Pole	FL RPM	Frame	Voltage	Hz	Phase	FL Amps
800	597	4	1778	5012US	4000	60	3	103
Enclosure	**IP**	**Ins. Class**	**S.F.**	**Duty**	**NEMA Nom. Eff.**	**NEMA Design**	**kVA Code**	**Ambient (°C)**
WP-I	23	F	1.15	CONT	94.6	-	H	40 C

Load	HP	kW	Amperes	Efficiency (%)	Power Factor (%)
Full Load	800	596.6	102.4	94.6	88.9
¾ Load	600.00	447.4	80.1	94.6	85.2
½ Load	400.00	298.3	60.0	94.1	76.2
¼ Load	200.00	149.1	38.7	91.8	60.5
No Load			30.6		5.5
Locked Rotor			751.50		28.3

Torque				Rotor wk² Inertia
Full Load (lb-ft)	Locked Rotor (% FLT)	Pull Up (% FLT)	Break Down (% FLT)	(lb-ft²)
2363	170	175	320	211.49

Safe Stall Time(s)		Sound Pressure dB(A) @ 1M	Bearings*		Approx. Motor Weight (lbs)
Cold	Hot		DE	NDE	
13.5	6.3	-	6321C3	6321C3 INS	

*Bearings are the only recommended spare part(s).

Motor Options:
Product Family:ODP & WP-I
Mounting:Footed,Shaft:US Shaft

Customer	
Customer PO	
Sales Order	
Project #	

Tag:

All characteristics are average expected values.

TOSHIBA INTERNATIONAL CORPORATION · HOUSTON, TEXAS U.S.A.

Engineering	bmammen	Doc. Written By	D. Suarez	Doc.# / Rev	MPCF-1119 / 0
Engr. Date	7/10/2014	Doc. Approved By	M. Campbell	Doc. Issued	6/8/2011

Issued Date	4/23/2015	Transmit #	
Issued By	dschoeck	Issued Rev	

TOSHIBA
Leading Innovation >>>

SPEED TORQUE/CURRENT CURVE

Model: 8004WPAK11E-C

HP	kW	Pole	FL RPM	Frame	Voltage	Hz	Phase	FL Amps
800	597	4	1778	5012US	4000	60	3	103
Enclosure	**IP**	**Ins. Class**	**S.F.**	**Duty**	**NEMA Nom. Eff.**	**NEMA Design**	**kVA Code**	**Ambient (°C)**
WP-I	23	F	1.15	CONT	94.6	-	H	40 C

Locked Rotor Amps	Rotor wk² Inertia (lb-ft²)	Torque			
		Full Load (lb-ft)	Locked Rotor (%)	Pull Up (%)	Break Down (%)
751.50	211.49	2363	170	175	320

Design Values

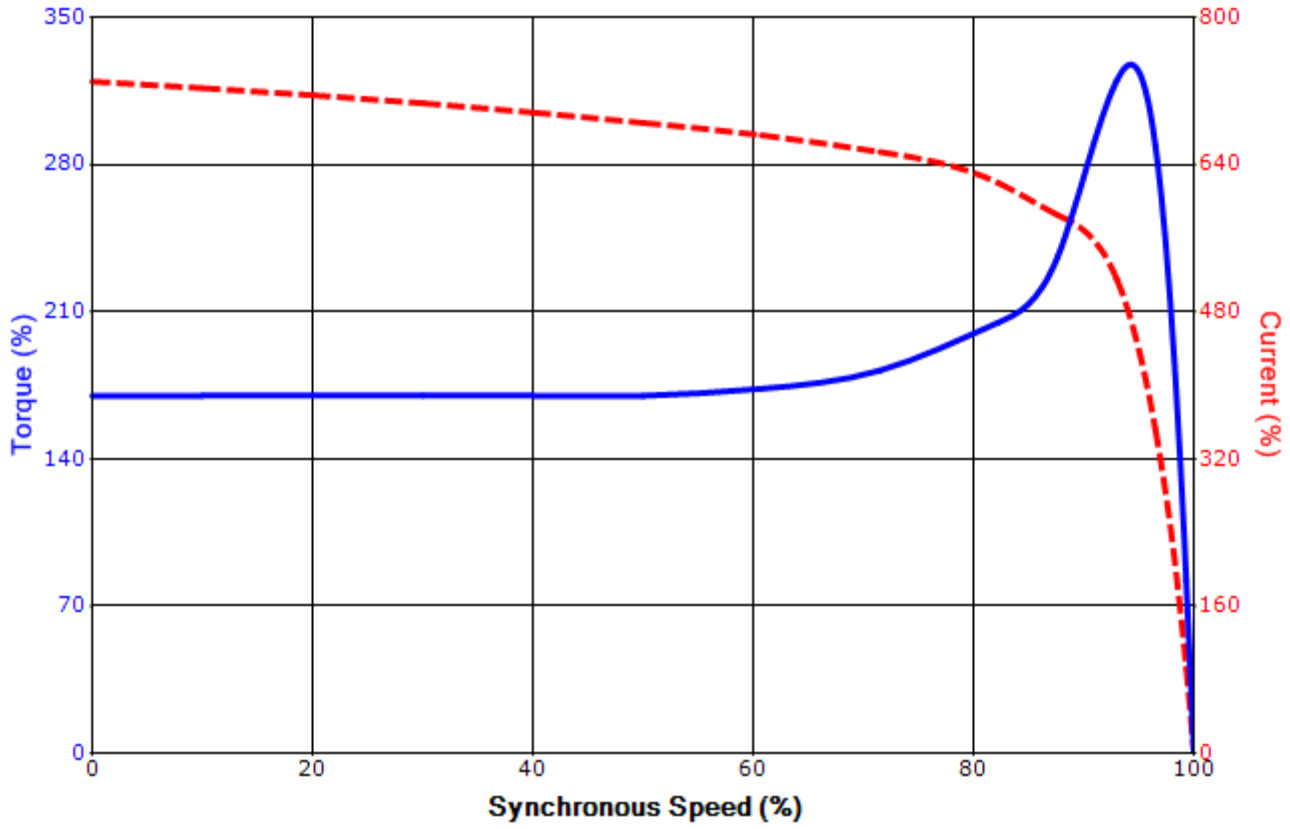

Customer			**wk² Load Inertia (lb-ft²)**	-
Customer PO			**Load Type**	-
Sales Order			**Voltage (%)**	100
Project #			**Accel. Time**	-

Tag:

All characteristics are average expected values.

TOSHIBA INTERNATIONAL CORPORATION · HOUSTON, TEXAS U.S.A.

Engineering	bmammen	**Doc. Written By**	D. Suarez	**Doc.# / Rev**	MPCF-1121 / 0
Engr. Date	7/10/2014	**Doc. Approved By**	M. Campbell	**Doc. Issued**	6/8/2011

Motor Connection Diagrams
6 Leads

Across-the-Line Starting / Running Connections

Low Voltage – Delta

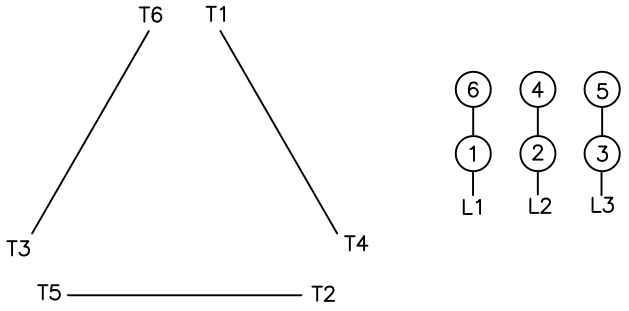

High Voltage – Wye

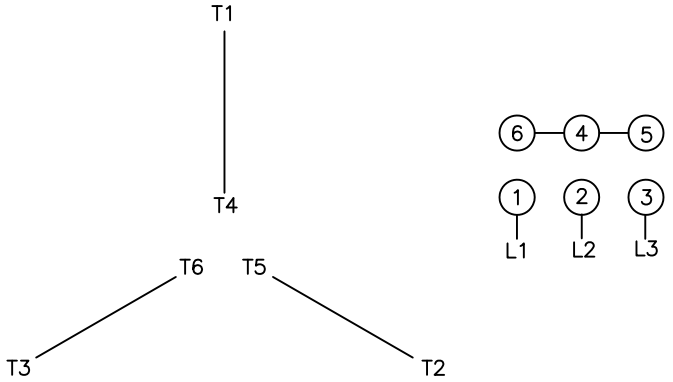

Switch L1 and L2 to reverse rotation