SS203002LE

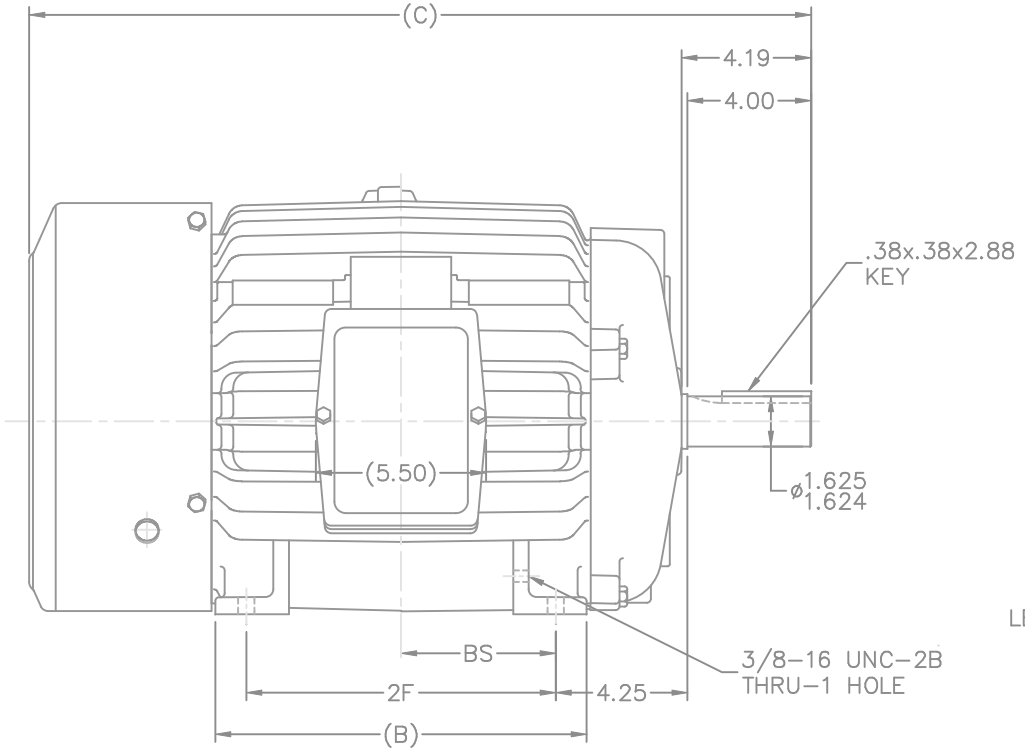

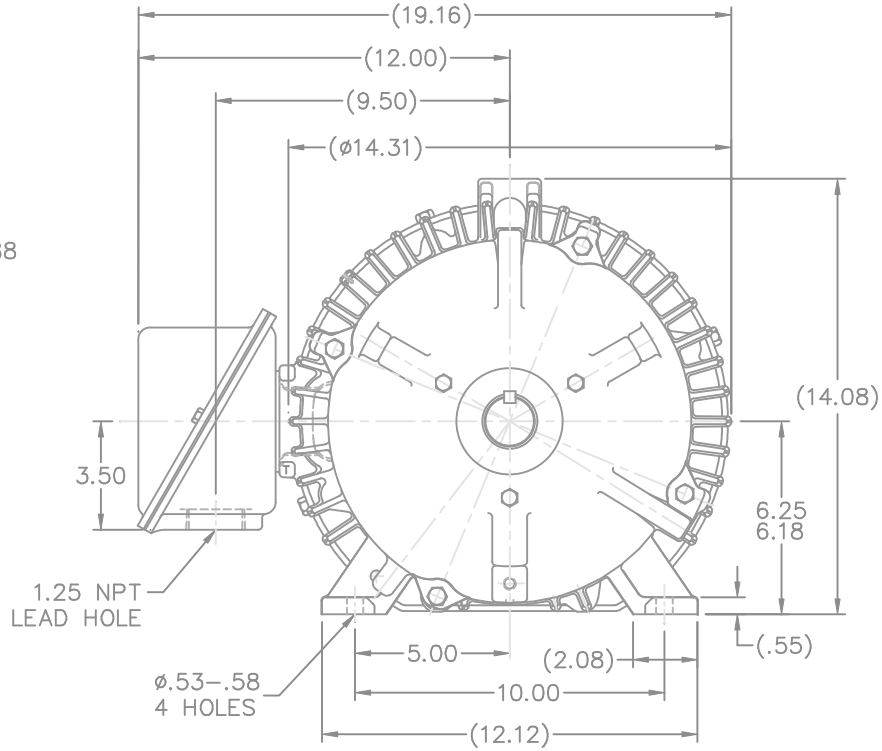

NOTES:
1. BOX CAN BE ROTATED ON ITS AXIS.
2. BOX CAN BE MOUNTED ON OPPOSITE SIDE BY REMOVING BRACKETS AND TURNING FRAME 180°.
3. NAMEPLATE TO BE READ FROM CONDUIT BOX SIDE OF MOTOR.

DASH	FRAME	B	C	2F	BS
1050	254T	10.25	23.52	8.25	4.12
1225	256T	12.00	25.27	10.00	5.00

NO.	REVISION	BY & DATE	CHK

TOLERANCES UNLESS SPECIFIED

DEC.	INCHES
.X	±.1
.XX	±.03
.XXX	±.005
.XXXX	±.0005
ANG	±7'30"

LEESON — ELECTRIC MOTORS GEARMOTORS AND DRIVES

TITLE OUTLINE
250 FR. – BB – TS – STD.

MAT'L.
FINISH
CAD FILE ss203002LE
RFP 08–17–2007
DIST LB

DRAWN RJW 08–17–2007
CHK ML 08–17–2007
APPD DR 08–17–2007
SCALE 1=4
REF
FMF MU81054
PREV

SIZE B | DRAWING NO. SS203002LE | PAGE OF | REV.

THIS DRAWING IN DESIGN AND DETAIL IS OUR PROPERTY AND MUST NOT BE USED EXCEPT IN CONNECTION WITH OUR WORK ALL RIGHTS OF DESIGN AND INVENTION ARE RESERVED
THIS IS AN ELECTRONICALLY GENERATED DOCUMENT – DO NOT SCALE THIS PRINT