SS301080LE

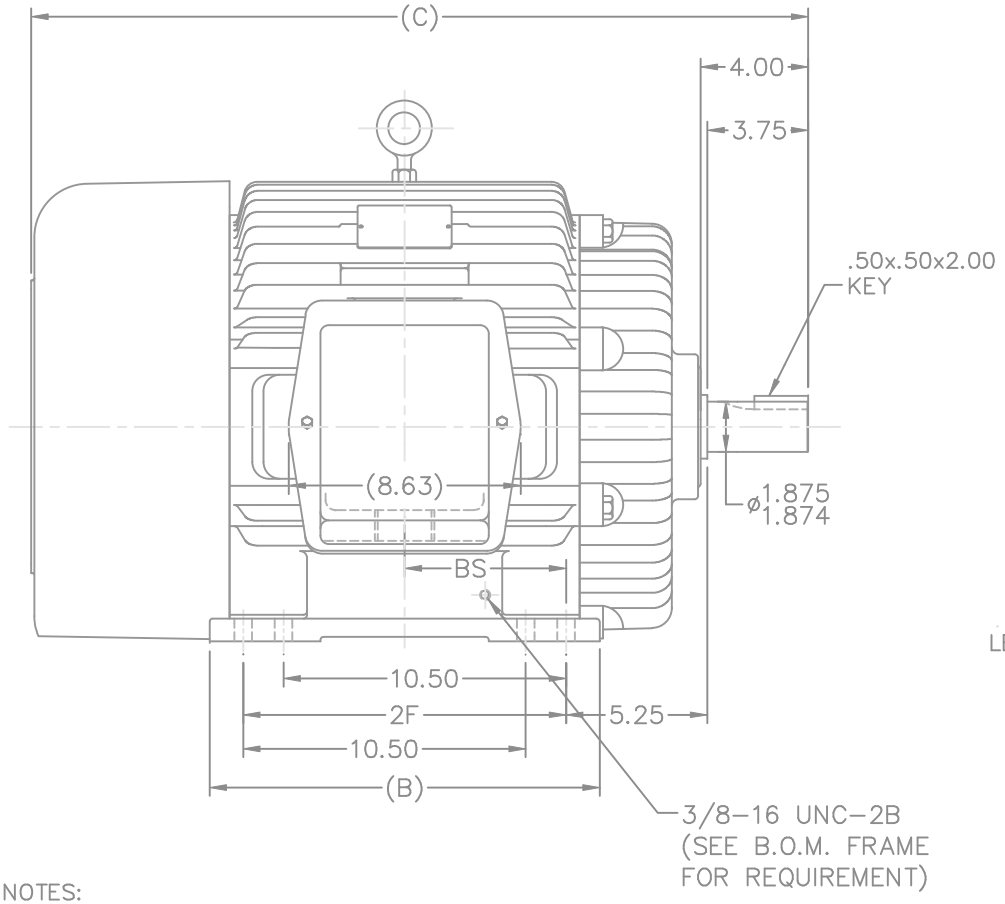

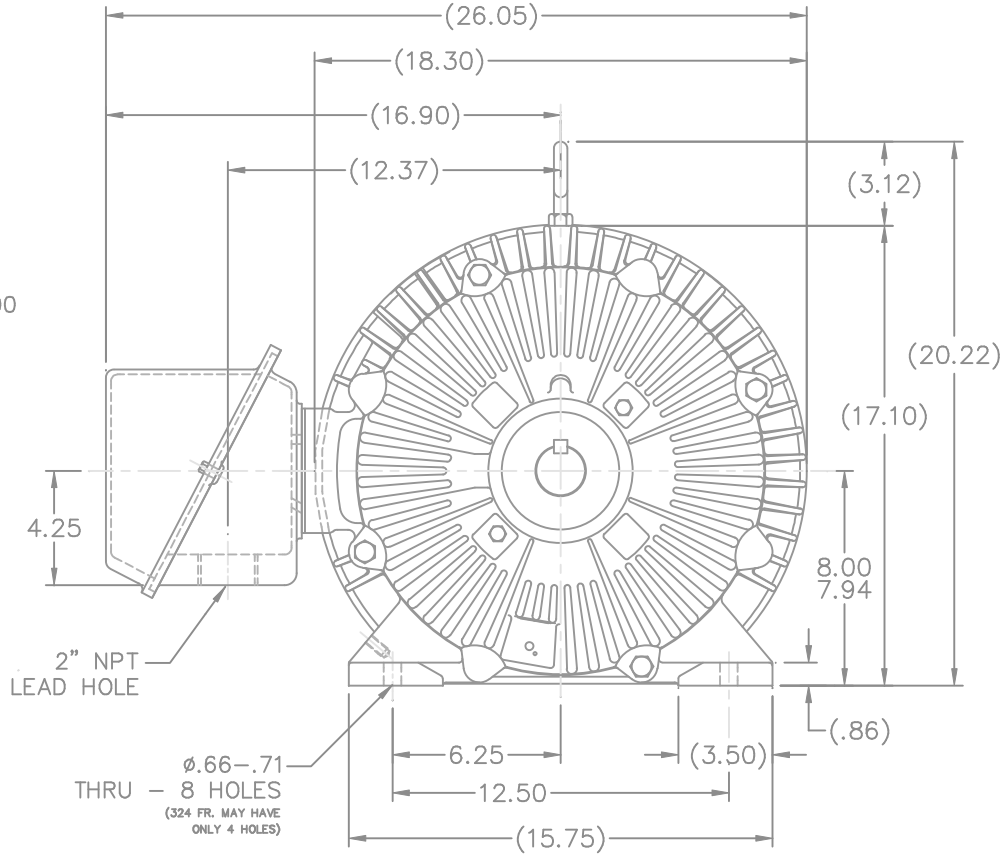

NOTES:
1. BOX CAN BE ROTATED IN 90° STEPS.
2. BOX CAN BE MOUNTED ON OPPOSITE SIDE BY REMOVING BRACKETS AND TURNING FRAME 180°.
3. NAMEPLATE TO BE READ FROM CONDUIT BOX SIDE OF MOTOR.

DASH	FR.	C	B	BS	2F
1150	324TS	27.37	13.00	5.25	10.50
1300	324/6TS	28.87	14.50	6.00	12.00

NO.	REVISION	BY & DATE	CHK

TOLERANCES UNLESS SPECIFIED

DEC.	INCHES
.X	±.1
.XX	±.03
.XXX	±.005
.XXXX	±.0005
ANG	±7'30"

LEESON — ELECTRIC MOTORS GEARMOTORS AND DRIVES

TITLE OUTLINE 320TS FRAME –TEFC

MAT'L.

FINISH

CAD FILE SS301080LE

RFP 10–29–2008

DIST LB

SIZE B

DRAWING NO. SS301080LE

PAGE 1 OF 1

REV.

DRAWN RWR 10–29–2008

CHK ML 10–29–2008

APPD DR 10–29–2008

SCALE 1=5

REF B–SS301080

FMF MU87713

PREV

THIS DRAWING IN DESIGN AND DETAIL IS OUR PROPERTY AND MUST NOT BE USED EXCEPT IN CONNECTION WITH OUR WORK ALL RIGHTS OF DESIGN AND INVENTION ARE RESERVED
THIS IS AN ELECTRONICALLY GENERATED DOCUMENT – DO NOT SCALE THIS PRINT