SS508654LE

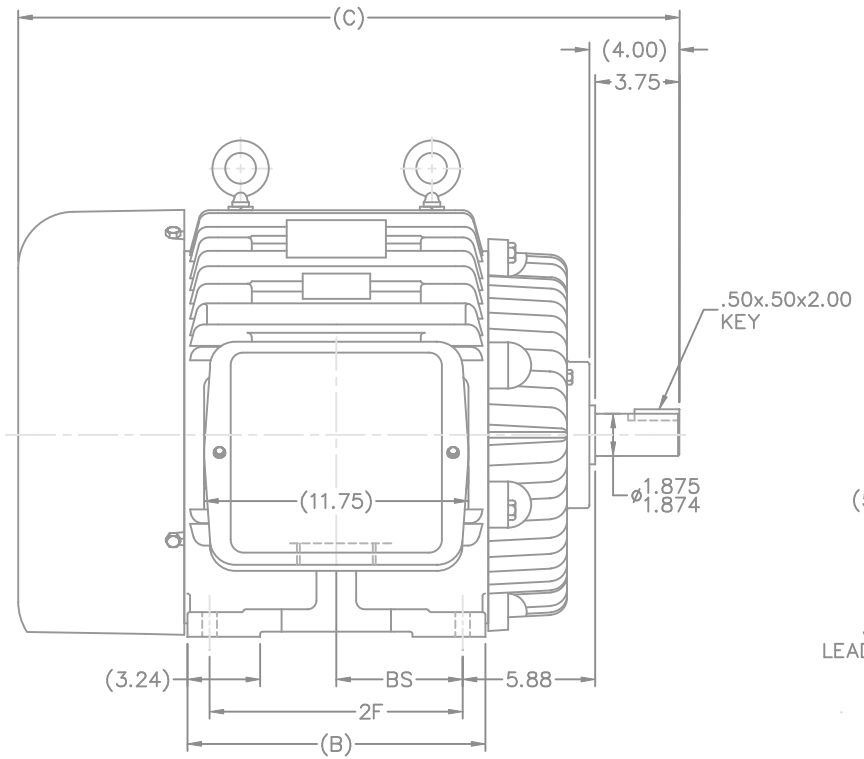


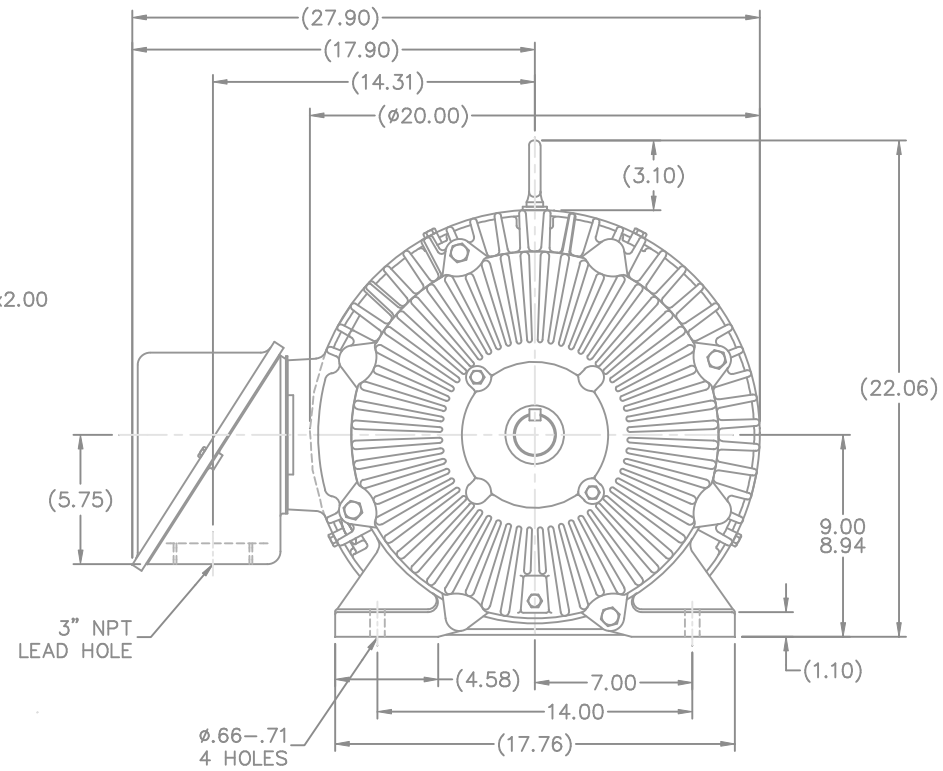


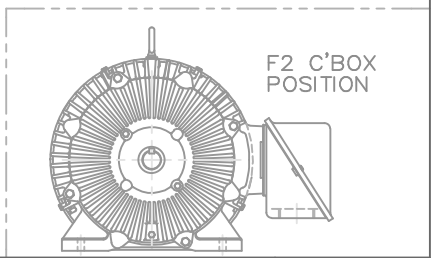


NOTES:
1. CONDUIT BOX CAN BE ROTATED IN 90° STEPS.
2. CONDUIT BOX CAN BE MOUNTED ON OPPOSITE SIDE BY REMOVING BRACKETS AND TURNING FRAME 180°.
3. NAMEPLATE TO BE READ FROM CONDUIT BOX SIDE OF MOTOR.

| DASH | FRAME | B | C | 2F | BS |
|---|---|---|---|---|---|
| 1350 | 364TS | 13.25 | 29.38 | 11.25 | 5.62 |
| 1450 | 365TS | 14.25 | 30.38 | 12.25 | 6.12 |

| NO. | REVISION | BY & DATE | CHK |
|---|---|---|---|

TOLERANCES UNLESS SPECIFIED

| DEC. | INCHES |
|---|---|
| .X | ±.1 |
| .XX | ±.03 |
| .XXX | ±.005 |
| .XXXX | ±.0005 |
| ANG | ±7'30" |

LEESON — ELECTRIC MOTORS GEARMOTORS AND DRIVES

TITLE OUTLINE 360TS FR. – TEFC – TAPPED LEAD HOLE

MAT'L.

FINISH

CAD FILE SS508654LE

RFP 09–25–2008

DIST WA

DRAWN RWR 09–25–2008
CHK ML 09–25–2008
APPD MH 09–25–2008
SCALE 1=5.5
REF B–SS508654
FMF MU87717
PREV

SIZE B | DRAWING NO. SS508654LE | PAGE OF | REV.

THIS DRAWING IN DESIGN AND DETAIL IS OUR PROPERTY AND MUST NOT BE USED EXCEPT IN CONNECTION WITH OUR WORK ALL RIGHTS OF DESIGN AND INVENTION ARE RESERVED
THIS IS AN ELECTRONICALLY GENERATED DOCUMENT – DO NOT SCALE THIS PRINT