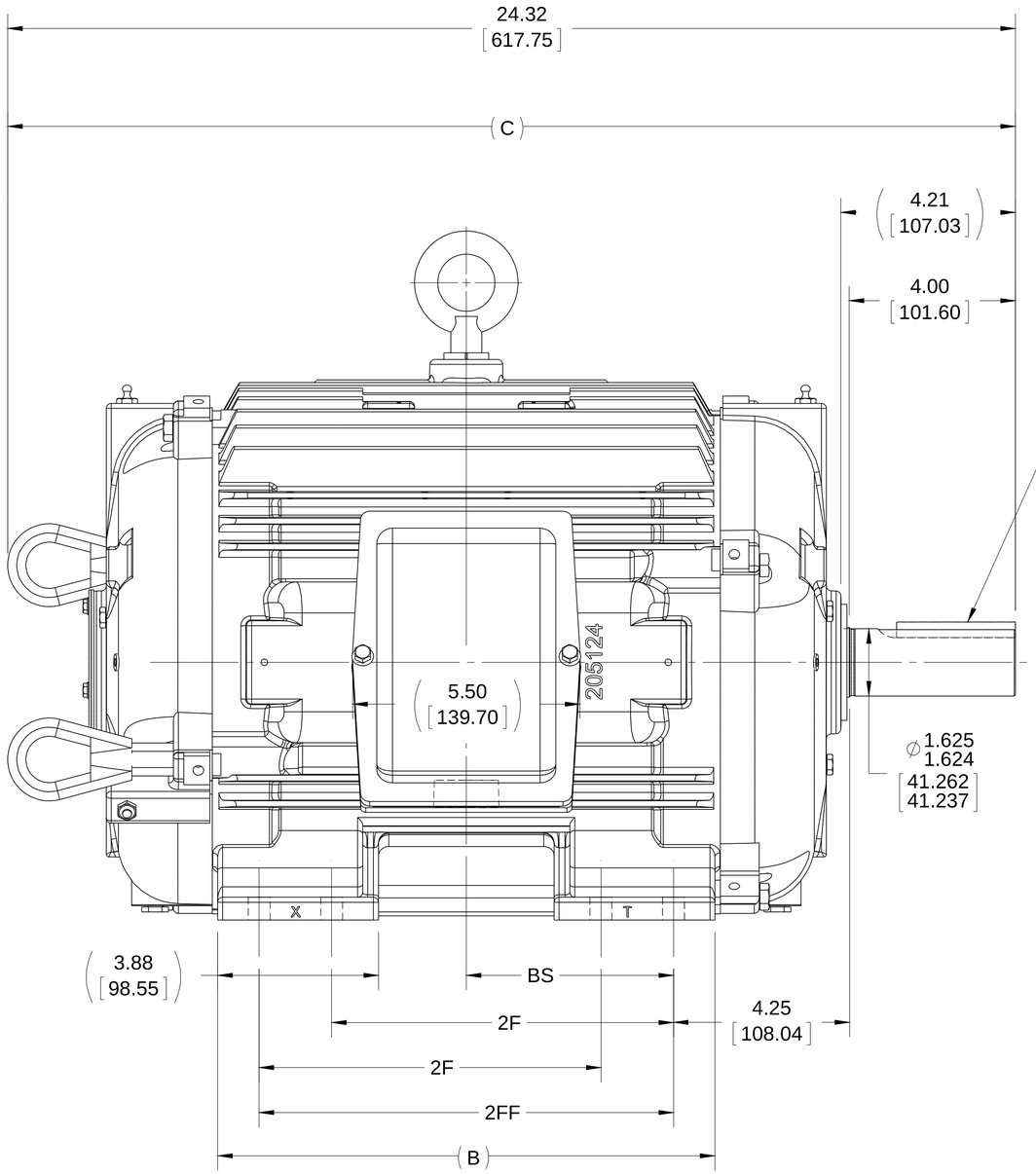

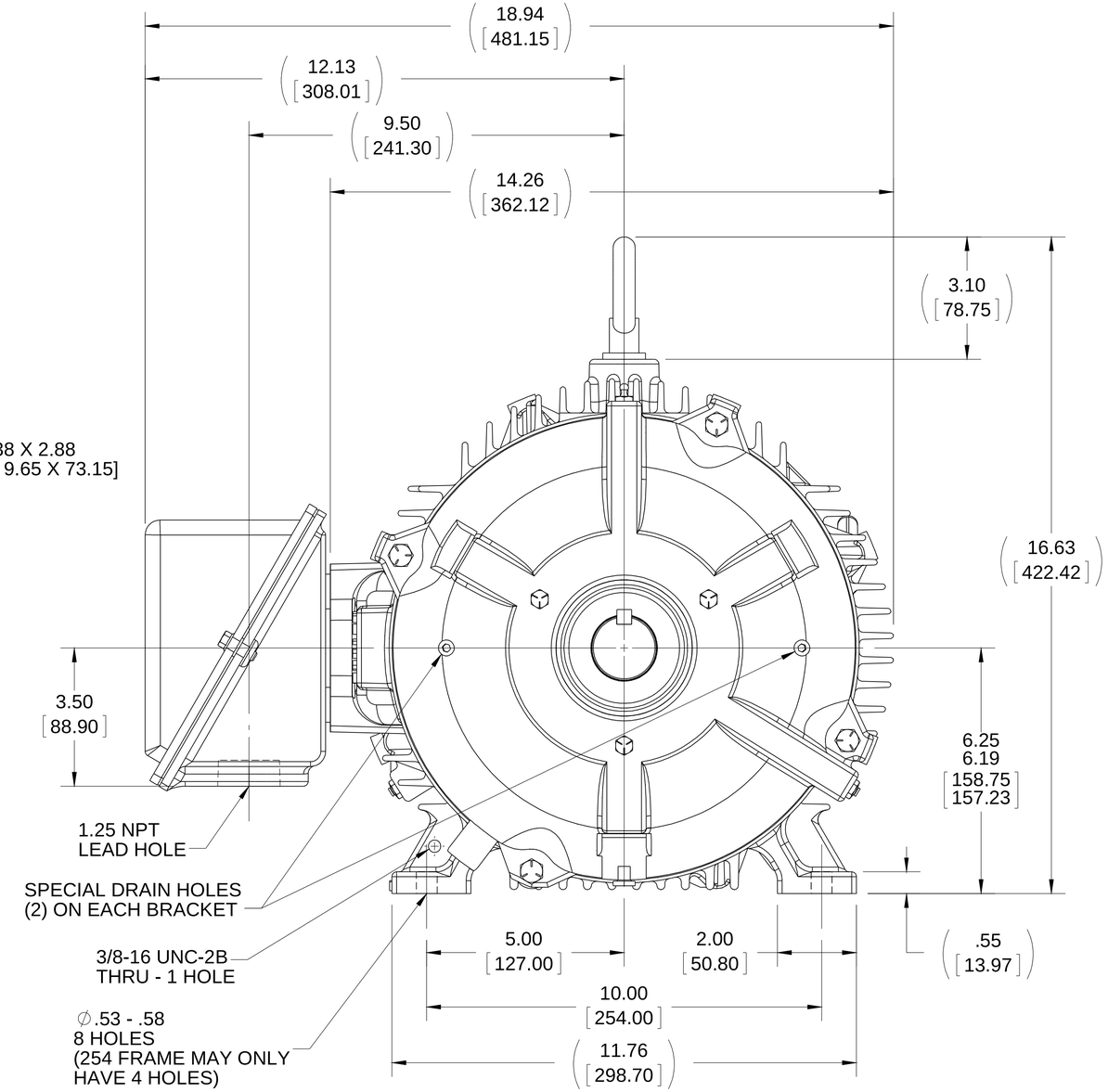

NOTES:

1. CONDUIT BOX CAN BE ROTATED IN 90° STEPS
2. CONDUIT BOX CAN BE MOUNTED ON OPPOSITE SIDE BY REMOVING BRACKETS AND TURNING FRAME 180°
3. NAMEPLATE READ FROM CONDUIT BOX SIDE OF MOTOR

SPECIAL DRAIN HOLES BOTH BRACKETS

DASH	FRAME	C	B	2F	2FF	BS
1050	254T	22.56 [573.02]	10.50 [266.70]	------- -------	8.25 [209.55]	4.12 [104.65]
1225	256T	24.31 [617.47]	12.00 [304.80]	8.25 [209.55]	10.00 [254.00]	5.00 [127.00]

DRAWING REVISION	REVISION BY	DATE
A	W. JOERGER	03-23-2015
ECO: ECO-0052212	APPROVED BY: E. HEIL	DATE: 03-23-2015

ECO DESCRIPTION: RELEASED FOR PRODUCTION

COPYRIGHT REGAL BELOIT AMERICA, INC. ALL RIGHTS RESERVED.
PROPRIETARY AND CONFIDENTIAL INFORMATION - THIS DOCUMENT IS THE PROPERTY OF REGAL BELOIT AMERICA, INC. ("OWNER") AND CONTAINS OWNER'S PROPRIETARY INFORMATION. ANY PERSON, CORPORATION OR OTHER FIRM RECEIVING IT IS DEEMED, BY RECEIVING IT, TO AGREE THAT IT, AND/OR ANY PART OF IT, SHALL NOT BE DISCLOSED TO ANY PERSON, CORPORATION OR OTHER ENTITY, DUPLICATED, AND/OR USED, EXCEPT AS EXPRESSLY APPROVED IN WRITING IN ADVANCE BY OWNER. THIS DOCUMENT SHALL BE RETURNED TO OWNER UPON REQUEST. IT MAY BE SUBJECT TO CERTAIN RESTRICTIONS UNDER APPLICABLE EXPORT CONTROL LAWS AND REGULATIONS.

TOLERANCES UNLESS OTHERWISE SPECIFIED:

DEC.	INCH	mm	ANGLE
.X	±0.1	[±2.5]	±7' 30"
.XX	±0.02	[±0.51]	
XXX	±0.005	[±0.127]	
.XXXX	±0.0005	[±0.0127]	

REMOVE BURRS & BREAK SHARP EDGES: .003/.015 [.076/.381] X 45°
CORNER FILLETS: R.02 [.51]
MACHINED SURFACES: 200 INCH / 5.1 mm
mm SHOWN IN [BRACKETS]

DRAWN BY	W. JOERGER
DATE	03-23-2015
APPROVED BY	E. HEIL
DATE	03-23-2015
REFERENCE	
THIRD ANGLE PROJECTION	

Regal Beloit America, Inc.

DESCRIPTION: OUTLINE
TEAO - HORIZ OR SHAFT UP/DOWN - 250T FR - INPRO SEAL RR

MATERIAL | PROCESS/FINISH

SIZE: B | DRAWING NUMBER: SS208432 | SHEET: 1 OF 1