Uncontrolled Copy

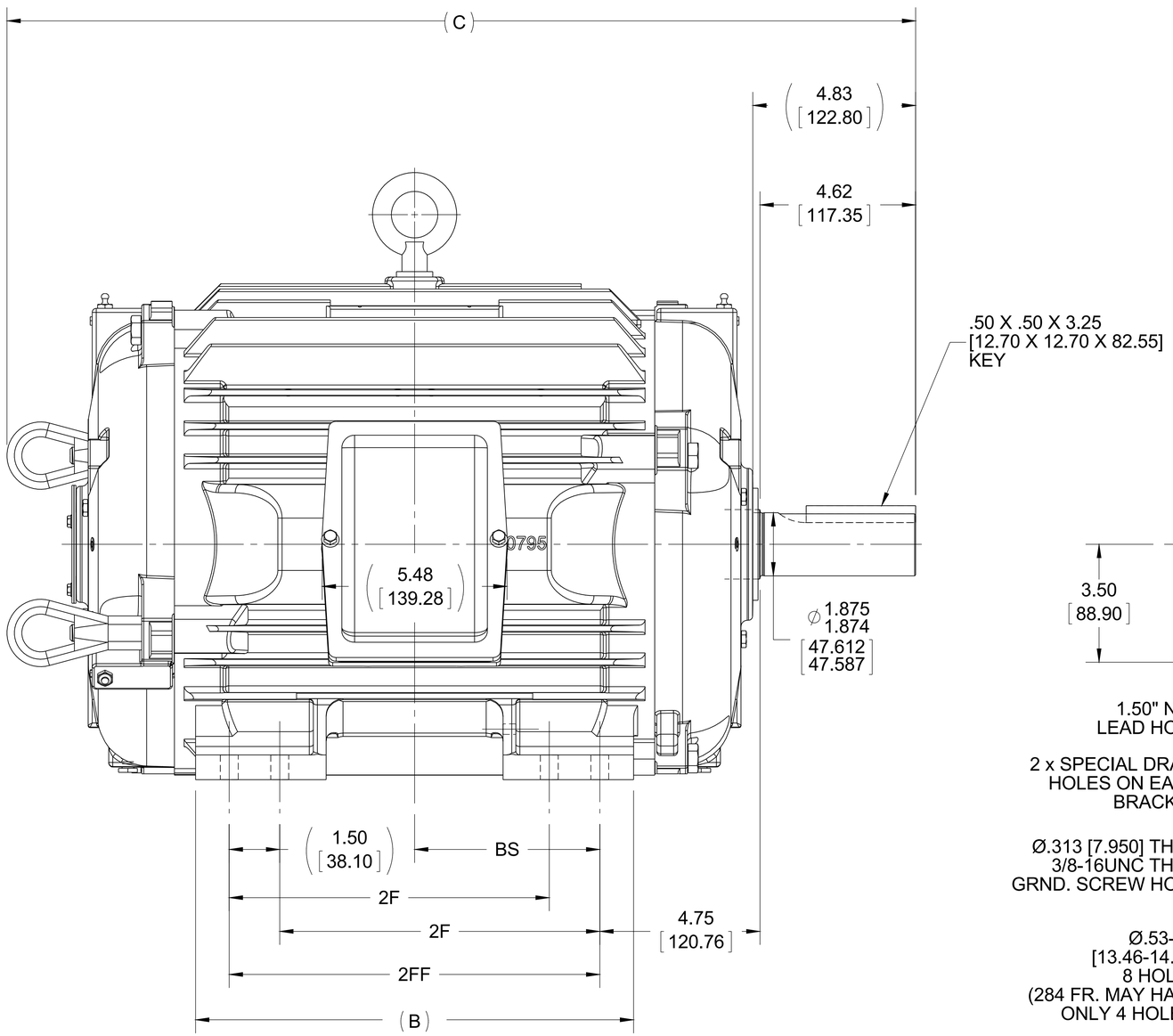

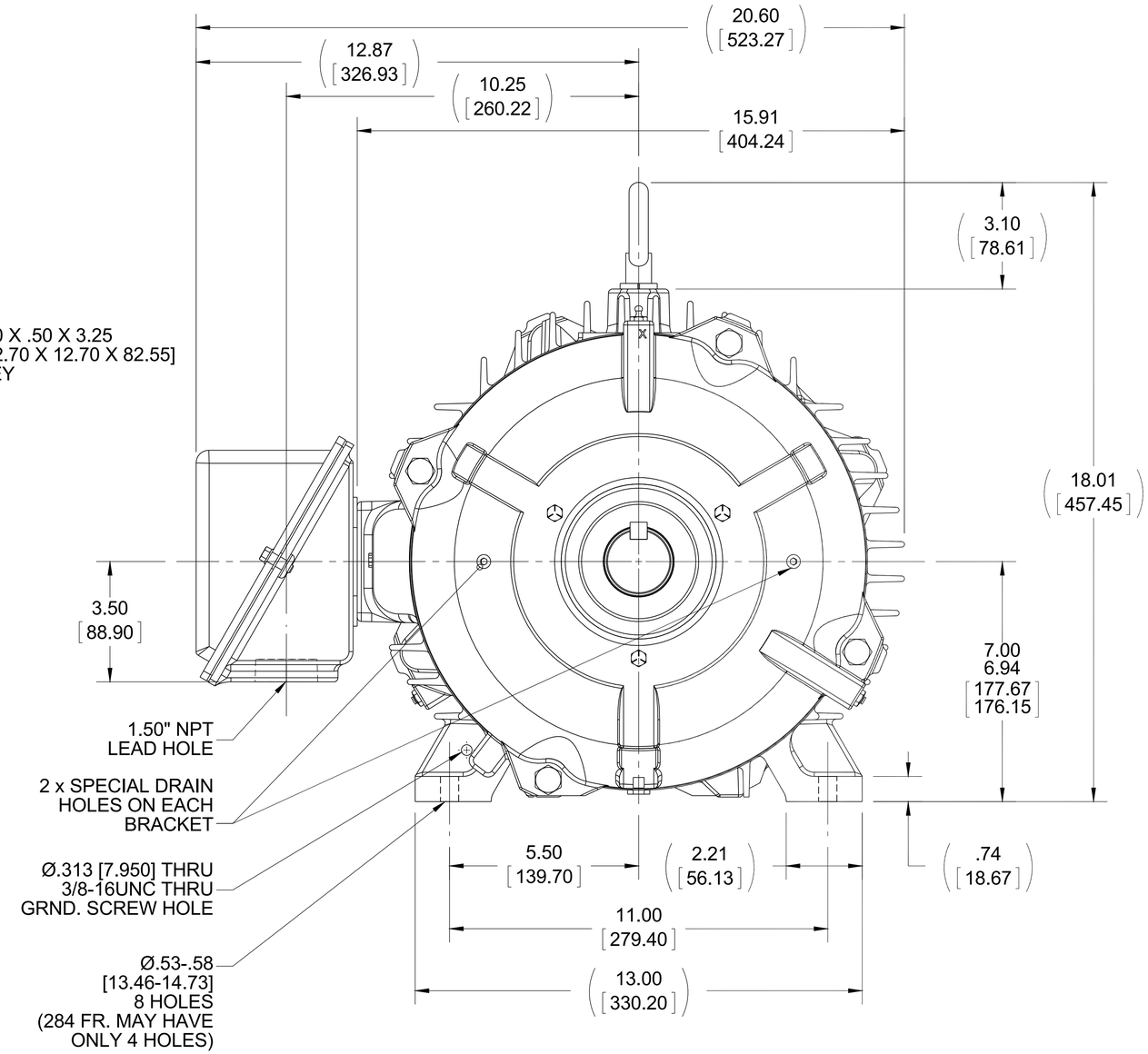

NOTES:
1. CONDUIT BOX CAN BE ROTATED IN 90° STEPS.
2. CONDUIT BOX CAN BE MOUNTED ON OPPOSITE SIDE BY REMOVING BRACKETS AND TURNING FRAME 180°.
3. NAMEPLATE TO BE READ FROM CONDUIT BOX SIDE OF MOTOR.

DASH	FRAME	B	C	BS	2F	2FF
1275	284T	12.50 [317.50]	25.47 [646.94]	4.75 [120.65]	---	9.50 [241.30]
1425	284/286T	13.00 [330.20]	26.97 [685.04]	5.50 [139.70]	9.50 [241.30]	11.00 [279.40]

DRAWING REVISION	REVISION BY	DATE
B	JWO	07-27-2015
ECO	APPROVED BY	DATE
ECO-0081645	TB	07-27-2015

ECO DESCRIPTION
NMR-0084175, MU120012

COPYRIGHT REGAL BELOIT AMERICA, INC. ALL RIGHTS RESERVED.
PROPRIETARY AND CONFIDENTIAL INFORMATION - THIS DOCUMENT IS THE PROPERTY OF REGAL BELOIT AMERICA, INC. ("OWNER") AND CONTAINS OWNER'S PROPRIETARY INFORMATION. ANY PERSON, CORPORATION OR OTHER FIRM RECEIVING IT IS DEEMED, BY RECEIVING IT, TO AGREE THAT IT, AND/OR ANY PART OF IT, SHALL NOT BE DISCLOSED TO ANY PERSON, CORPORATION OR OTHER ENTITY, DUPLICATED, AND/OR USED, EXCEPT AS EXPRESSLY APPROVED IN WRITING IN ADVANCE BY OWNER. THIS DOCUMENT SHALL BE RETURNED TO OWNER UPON REQUEST. IT MAY BE SUBJECT TO CERTAIN RESTRICTIONS UNDER APPLICABLE EXPORT CONTROL LAWS AND REGULATIONS.

TOLERANCES UNLESS OTHERWISE SPECIFIED:

DEC.	INCH	mm	ANGLE
.X	±0.1	[±2.5]	±7' 30"
.XX	±0.03	[±0.76]	
XXX	±0.005	[±0.127]	
.XXXX	±0.0005	[±0.0127]	

REMOVE BURRS & BREAK SHARP EDGES: .003/.015 [.076/.381]
CORNER FILLETS: .02 [.51]
MACHINED SURFACES: 200 INCH / 5.1 mm
mm SHOWN IN [BRACKETS]

DRAWN BY	W. JOERGER
DATE	03-27-2015
APPROVED BY	E. HEIL
DATE	03-27-2015
REFERENCE	
THIRD ANGLE PROJECTION	

REGAL™ Regal Beloit America, Inc.

DESCRIPTION
OUTLINE
280T FR - TEAO / TENV - BB - STD - 12.50" LAM

MATERIAL | PROCESS/FINISH

SIZE B | DRAWING NUMBER SS312689 | SHEET 1 OF 1