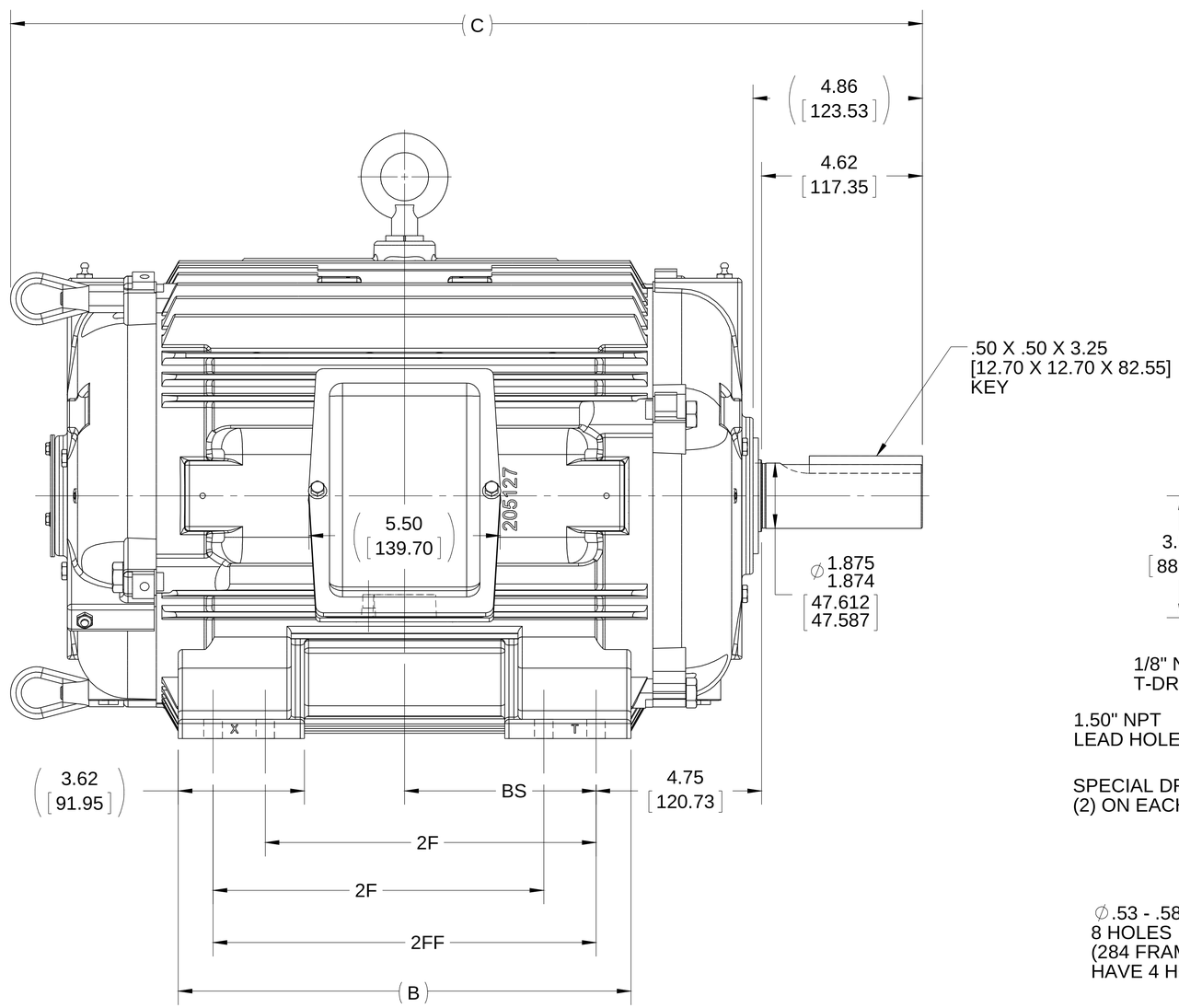

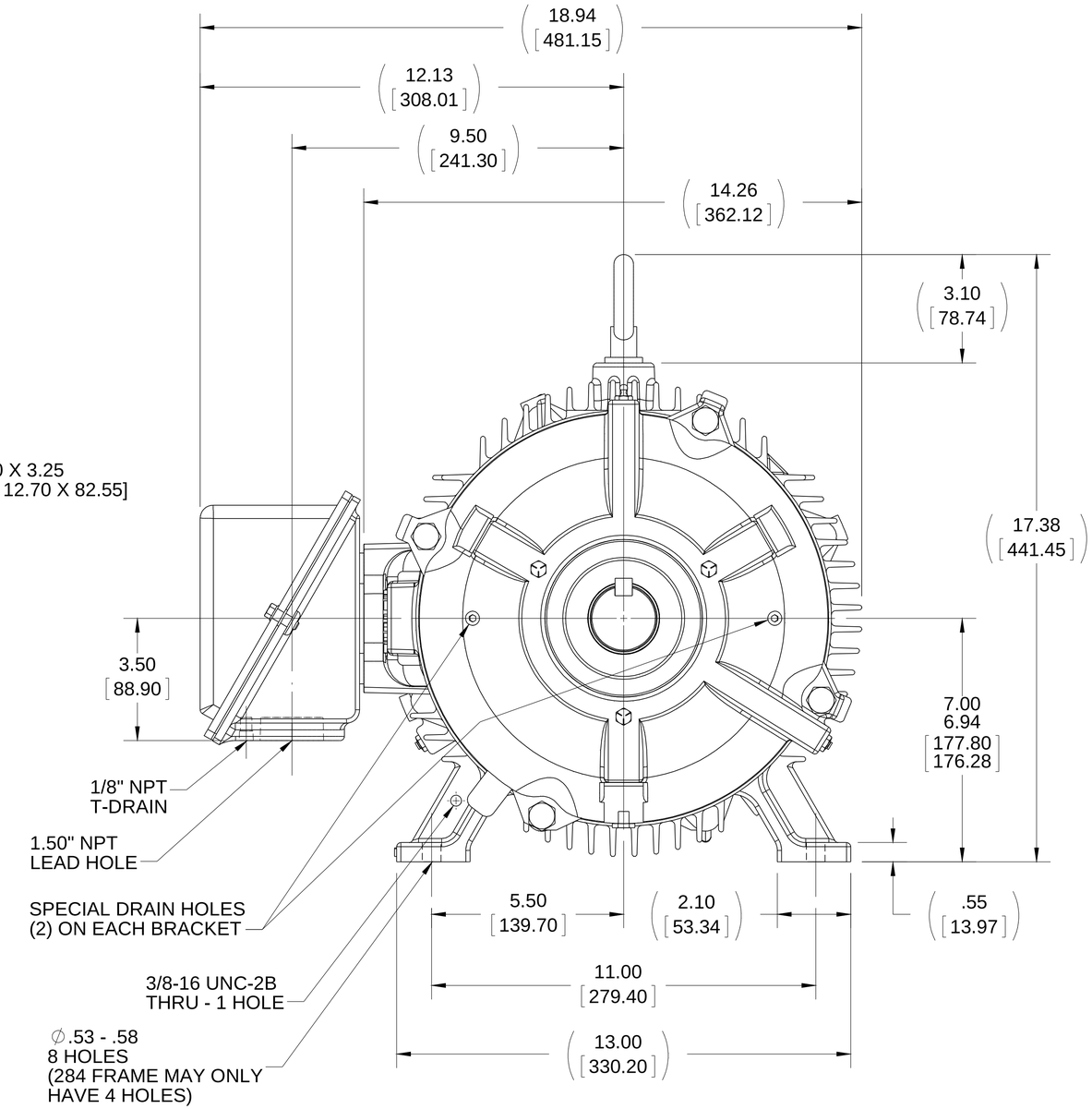

DASH	FRAME	B	C	2F	2FF	BS
1275	284T	11.50 [292.10]	24.69 [627.13]	9.50 [241.30]	---------	4.75 [120.65]
1425	286T	13.00 [330.20]	26.19 [665.23]	9.50 [241.30]	11.00 [279.40]	5.50 [139.70]

DRAWING REVISION A	REVISION BY W. JOERGER	DATE 03-21-2015
ECO ECO-0052212	APPROVED BY E. HEIL	DATE 03-31-2015
ECO DESCRIPTION RELEASED FOR PRODUCTION		

COPYRIGHT REGAL BELOIT AMERICA, INC. ALL RIGHTS RESERVED.
PROPRIETARY AND CONFIDENTIAL INFORMATION - THIS DOCUMENT IS THE PROPERTY OF REGAL BELOIT AMERICA, INC. ("OWNER") AND CONTAINS OWNER'S PROPRIETARY INFORMATION. ANY PERSON, CORPORATION OR OTHER FIRM RECEIVING IT IS DEEMED, BY RECEIVING IT, TO AGREE THAT IT, AND/OR ANY PART OF IT, SHALL NOT BE DISCLOSED TO ANY PERSON, CORPORATION OR OTHER ENTITY, DUPLICATED, AND/OR USED, EXCEPT AS EXPRESSLY APPROVED IN WRITING IN ADVANCE BY OWNER. THIS DOCUMENT SHALL BE RETURNED TO OWNER UPON REQUEST. IT MAY BE SUBJECT TO CERTAIN RESTRICTIONS UNDER APPLICABLE EXPORT CONTROL LAWS AND REGULATIONS.

TOLERANCES UNLESS OTHERWISE SPECIFIED:

DEC.	INCH	mm	ANGLE
.X	±0.1	[±2.5]	±7' 30"
.XX	±0.02	[±0.51]	
XXX	±0.005	[±0.127]	
.XXXX	±0.0005	[±0.0127]	

REMOVE BURRS & BREAK SHARP EDGES: .003/.015 [.076/.381] X 45°
CORNER FILLETS: R.02 [.51]
MACHINED SURFACES: 200 INCH / 5.1 mm
mm SHOWN IN [BRACKETS]

DRAWN BY W. JOERGER	Regal Beloit America, Inc.	
DATE 03-31-2015		
APPROVED BY E. HEIL	DESCRIPTION OUTLINE	
DATE 03-31-2015	TEAO - HORIZ OR SHAFT UP/DOWN - 280T FR - 11.00 LAM	
REFERENCE	MATERIAL	PROCESS/FINISH
THIRD ANGLE PROJECTION	SIZE B / DRAWING NUMBER SS312693	SHEET 1 OF 1