037702LE

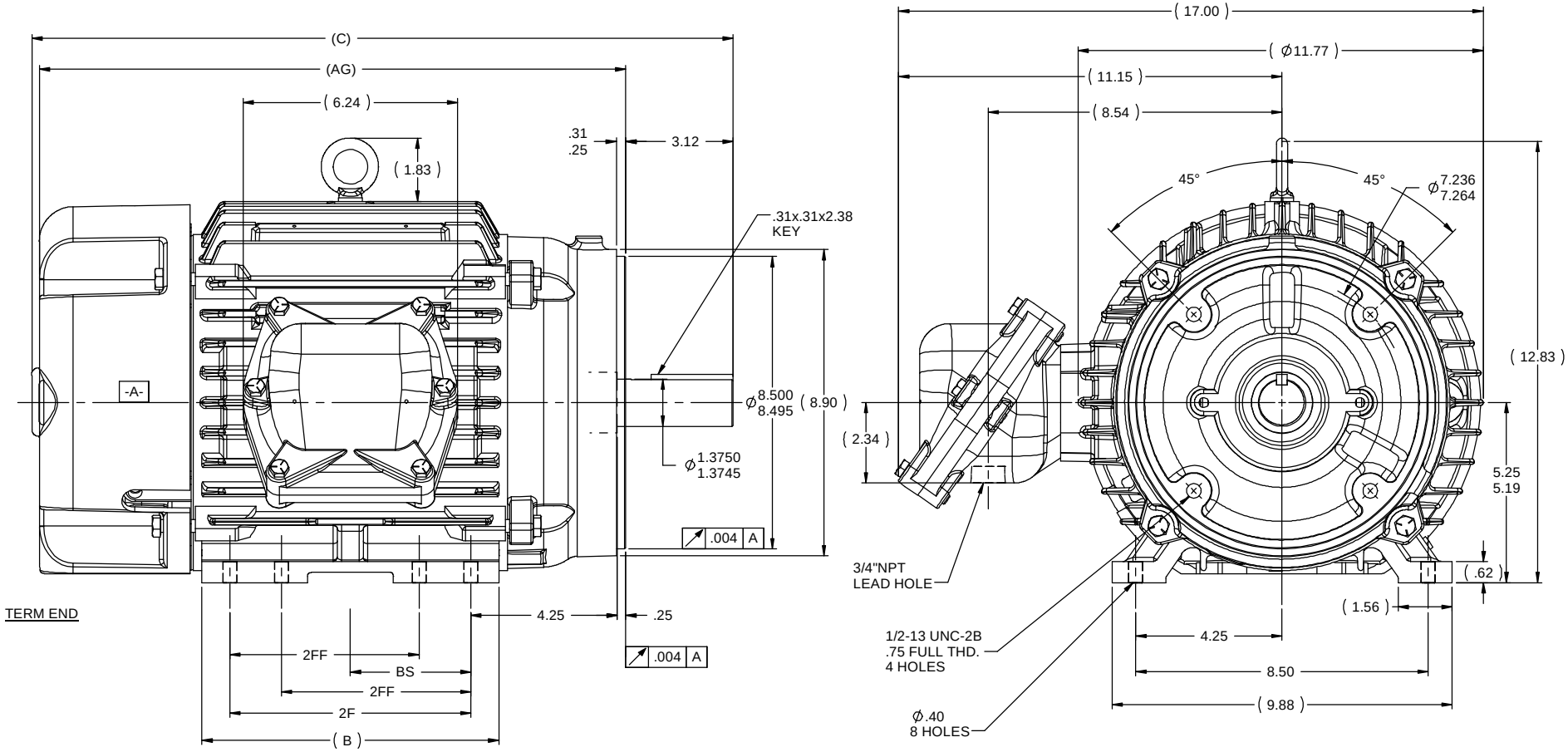

NOTES:

1. CONDUIT BOX CAN BE ROTATED IN 90 ° STEPS.
2. CONDUIT BOX CAN BE MOUNTED IN OPPOSITE SIDE BY REMOVING BRACKETS AND TURNING FRAME 180 °. THIS MODIFICATION CAN BE PERFORMED ONLY BY THE ORGINAL EQUIPMENT MANUFACTURER, OR BY A FACILITY THAT IS COVERED UNDER UNDERWRITERS LABORATORIES INC. CATEGORY PTKQ, TITLED "MOTOR AND GENERATORS,. REBUILT FOR USE IN HAZARDOUS LOCATION".
3. NAMEPLATE TO BE READ FROM CONDUIT BOX SIDE OF MOTOR.

1212	213/215	23.45	11.76	10	7	5	20.11
912	213/215	20.45	8.63	7	5.5	3.5	17.11
DASH	FRAME	C	B	2F	2FF	BS	AG

NO	REVISION	BY & DATE	CHK
01	UPDATED PER IS12-0462	GR 2/14/2012	PN

TOLERANCES UNLESS SPECIFIED

DEC	INCHES
.X	±.1
.XX	±.02
.XXX	±.005
.XXXX	±.0005
ANG	±7'30"

LEESON ELECTRIC MOTORS GEARMOTORS AND DRIVES

TITLE OUTLINE
210 FR. - EPFC

MAT'L
FINISH
RFP
CAD FILE
DIST 037702LE

DRAWN PN 9/2/2010
CHK AK 9/2/2010
APPR
SCALE 1:4
REF 037660
FMF
PREV

SIZE B
DRAWING NO 037702LE
REV 01

THIS DRAWING IN DESIGN AND DETAIL IS OUR PROPERTY AND MUST NOT BE USED EXCEPT IN CONNECTION WITH OUR WORK. ALL RIGHTS OF DESIGN AND INVENTION ARE RESERVED. THIS IS AN ELECTRONICALLY GENERATED DOCUMENT - DO NOT SCALE THIS PRINT

2/14/2012 5:29:16 AM - Converted by Connexus