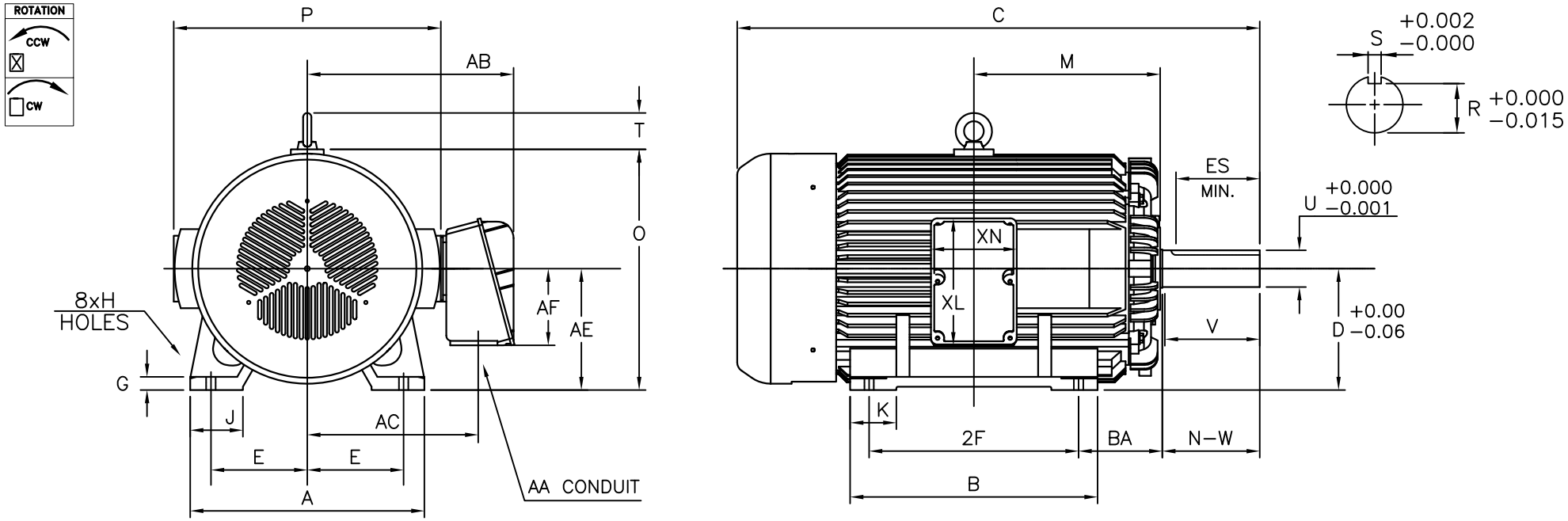

UNITS: INCHES

FRAME SIZE	MOTOR DIMENSIONS											CONDUIT BOX						
	A	B	C	D	G	J	K	M	O	P	T	AA[NPT]	AB	AC	AE	AF	XL	XN
N587US	28.0	29.6	55.6	14.50	1.6	6.3	5.6	22.3	28.8	31.9	4.4	4.00	24.7	20.5	14.5	9.2	15.2	10.3
N587UZ	28.0	29.6	62.4	14.50	1.6	6.3	5.6	22.3	28.8	31.9	4.4	4.00	24.7	20.5	14.5	9.2	15.2	10.3
N587UZQ	28.0	29.6	62.4	14.50	1.6	6.3	5.6	22.3	28.8	31.9	4.4	4.00	24.7	20.5	14.5	9.2	15.2	10.3

FRAME SIZE	MOUNTING				SHAFT EXTENSION			KEY SEAT			BEARINGS		MAXIMUM WEIGHT
	E	2F	H	BA	N–W	V	U	R	S	ES	LS	OS	
N587US	11.50	25.00	1.2	10.00	4.75	4.50	2.875	2.450	0.750	3.00	6320C3	6320C3	4000 lbs.
N587UZ	11.50	25.00	1.2	10.00	11.62	11.38	3.875	3.309	1.000	10.00	NU324C3	6320C3	
N587UZQ	11.50	25.00	1.2	10.00	11.62	11.38	4.375	3.817	1.000	10.00	NU324C3	6320C3	

NOTES:
1. DIMENSION V REPRESENTS LENGTH OF STRAIGHT PART OF SHAFT
2. MAIN CONDUIT BOX MAY BE ROTATED IN 90° INCREMENTS
3. KEY DIMENSIONS EQUAL S x S x 10.00 FOR UZ & UZQ AND S x S x 3.00 FOR US (MOTOR SUPPLIED WITH KEY)
4. MOTOR WEIGHT SHOWN IS MAXIMUM HORSEPOWER IN FRAME
5. STANDARD PRODUCT USE BI–DIRECTIONAL FAN. OPPOSITE ROTATION AVAILABLE ONLY BY CONNECTION CHANGE

CUSTOMER: _____ MOTOR MODEL NO.: _____

P.O. NO.: _____ HP: _____ VOLTAGE: _____ RPM(SYN.): _____ Hz: _____

FRAME SIZE: _____ PRODUCT TYPE: TEFC EQP III, EPACT, & HIGH EFFICIENCY QUARRY DUTY

COMMENTS: _____

PER: _____ DATE: _____

TAG NO's.:

- [x] STANDARD (NO AUX. BOXES)
- [ ] RTD AUX. BOX
- [ ] SPACE HEATER AUX. BOX
- [ ] BEARING RTD's

TOSHIBA RESERVES THE RIGHT TO MAKE CHANGES OF TECHNICAL IMPROVEMENT AND THE DATA MAY CHANGE WITHOUT NOTICE [x] PRELIMINARY

DO NOT USE FOR CONSTRUCTION, INSTALLATION, OR APPLICATION PURPOSES UNLESS THE DRAWING IS MARKED AS CERTIFIED [ ] CERTIFIED

TOSHIBA

TOSHIBA INTERNATIONAL CORPORATION

TOTALLY–ENCLOSED FAN–COOLED
HORIZONTAL FOOT–MOUNTED
3 PHASE INDUCTION MOTOR
F1 ASSEMBLY

XT SERIES

VISIT OUR WEBSITE AT:
www.toshiba.com/ind

MDSL0171–16 R00

Issued Date	4/23/2015	Transmit #	
Issued By	dschoeck	Issued Rev	

TOSHIBA
Leading Innovation >>>

TYPICAL MOTOR PERFORMANCE DATA

Model: A2506FLF4BMQ

HP	kW	Pole	FL RPM	Frame	Voltage	Hz	Phase	FL Amps
250	186	6	1185	N587UZ	460	60	3	296
Enclosure	**IP**	**Ins. Class**	**S.F.**	**Duty**	**NEMA Nom. Eff.**	**NEMA Design**	**kVA Code**	**Ambient (°C)**
TEFC	44	F	1.15	CONT	94.3	B	G	40 C

Load	HP	kW	Amperes	Efficiency (%)	Power Factor (%)
Full Load	250	186.4	296.0	94.3	84.1
¾ Load	187.50	139.8	222.2	94.5	82.9
½ Load	125.00	93.2	159.2	94.0	78.3
¼ Load	62.50	46.6	105.9	88.3	62.6
No Load			67.0		7.5
Locked Rotor			1800.00		31.3

Torque				Rotor wk² Inertia
Full Load (lb-ft)	Locked Rotor (% FLT)	Pull Up (% FLT)	Break Down (% FLT)	(lb-ft²)
1108	220	155	205	163.51

Safe Stall Time(s)		Sound Pressure dB(A) @ 1M	Bearings*		Approx. Motor Weight (lbs)
Cold	Hot		DE	NDE	
18.1	8.8	-	NU324C3	6320C3	

*Bearings are the only recommended spare part(s).

Motor Options:
Product Family:Quarry
Mounting:Footed,Shaft:UZ Shaft

Customer	
Customer PO	
Sales Order	
Project #	

Tag:

All characteristics are average expected values.

TOSHIBA INTERNATIONAL CORPORATION · HOUSTON, TEXAS U.S.A.

Engineering	jaustin	Doc. Written By	D. Suarez	Doc.# / Rev	MPCF-1119 / 0
Engr. Date	7/22/2014	Doc. Approved By	M. Campbell	Doc. Issued	6/8/2011

Issued Date	4/23/2015	Transmit #	
Issued By	dschoeck	Issued Rev	

TOSHIBA
Leading Innovation >>>

SPEED TORQUE/CURRENT CURVE

Model: A2506FLF4BMQ

HP	kW	Pole	FL RPM	Frame	Voltage	Hz	Phase	FL Amps
250	186	6	1185	N587UZ	460	60	3	296
Enclosure	**IP**	**Ins. Class**	**S.F.**	**Duty**	**NEMA Nom. Eff.**	**NEMA Design**	**kVA Code**	**Ambient (°C)**
TEFC	44	F	1.15	CONT	94.3	B	G	40 C

Locked Rotor Amps	Rotor wk² Inertia (lb-ft²)	Torque			
		Full Load (lb-ft)	Locked Rotor (%)	Pull Up (%)	Break Down (%)
1800.00	163.51	1108	220	155	205

Design Values

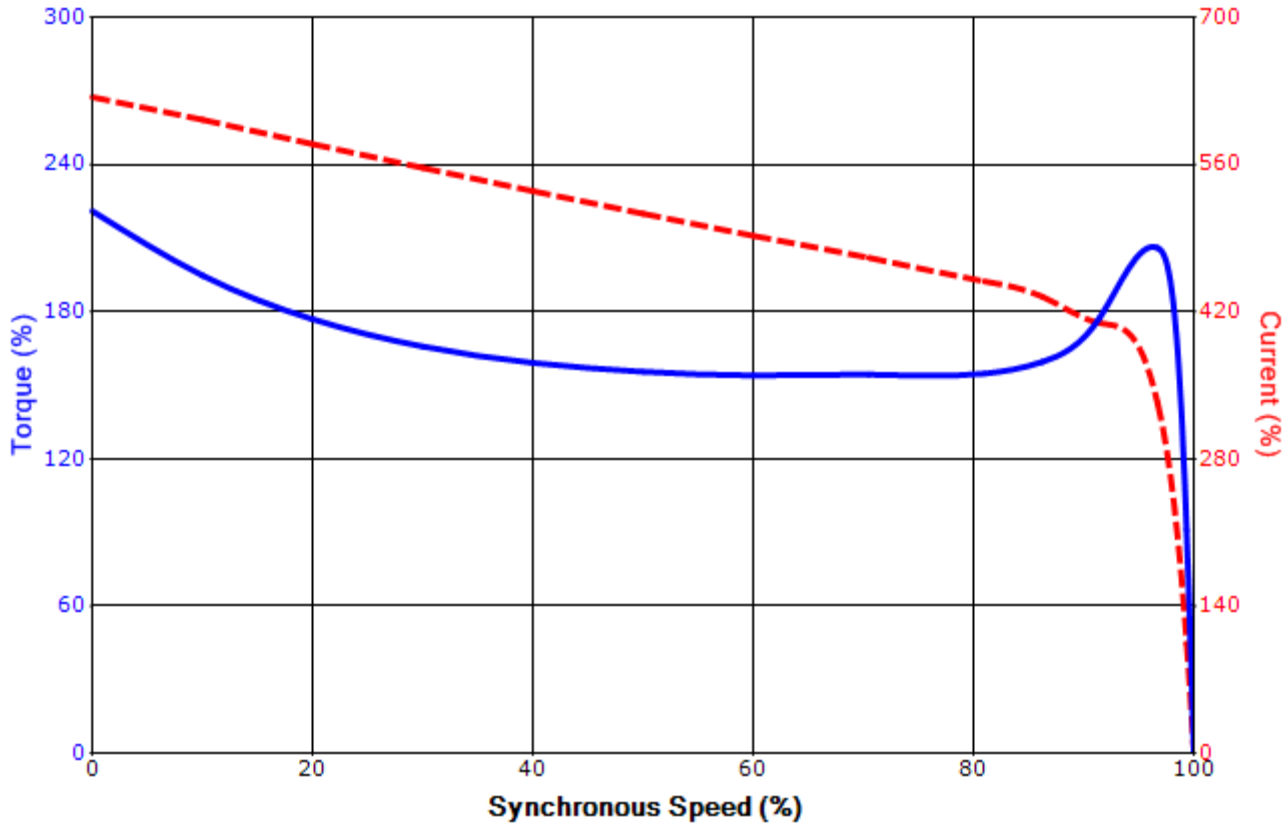

Customer			**wk² Load Inertia (lb-ft²)**	-
Customer PO			**Load Type**	-
Sales Order			**Voltage (%)**	100
Project #			**Accel. Time**	-

Tag:

All characteristics are average expected values.

TOSHIBA INTERNATIONAL CORPORATION · HOUSTON, TEXAS U.S.A.

Engineering	jaustin	**Doc. Written By**	D. Suarez	**Doc.# / Rev**	MPCF-1121 / 0
Engr. Date	7/22/2014	**Doc. Approved By**	M. Campbell	**Doc. Issued**	6/8/2011

Motor Connection Diagrams
12 Leads

Across-the-Line Starting / Running Connections

Low Voltage Delta

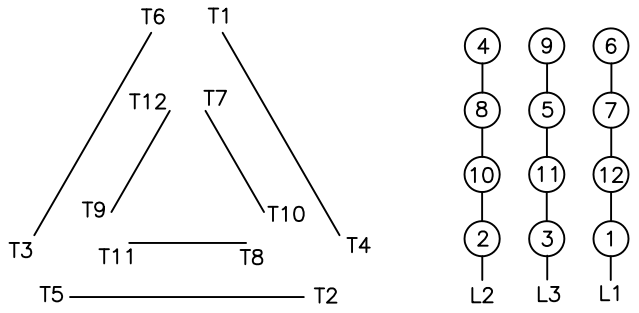

High Voltage Delta

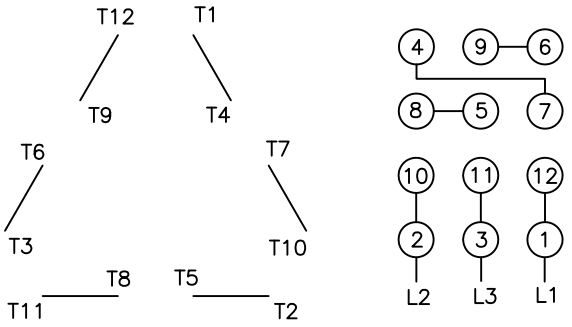

Switch L1 and L2 to reverse rotation

Suitable for Wye–Delta Starting and Limited Part–Winding–Starting.
Please Contact Toshiba International for specific connections.