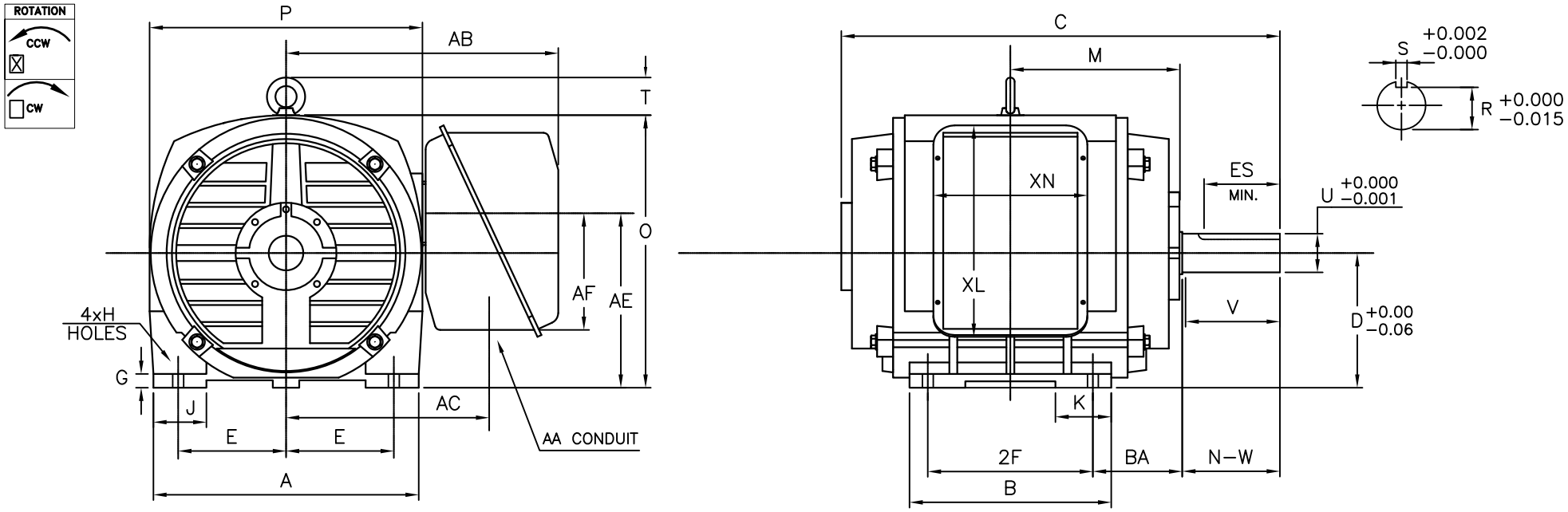

UNITS: INCHES

FRAME SIZE	MOTOR DIMENSIONS											CONDUIT BOX						
	A	B	C	D	G	J	K	M	O	P	T	AA	AB	AC	AE	AF	XL	XN
404TS	19.7	15.0	29.6	10.00	1.1	4.0	4.2	12.6	20.3	20.3	2.8	3.00	20.2	15.1	13.0	8.7	15.7	11.5
404T	19.7	15.0	32.6	10.00	1.1	4.0	4.2	12.6	20.3	20.3	2.8	3.00	20.2	15.1	13.0	8.7	15.7	11.5

FRAME SIZE	MOUNTING				SHAFT EXTENSION			KEY SEAT			BEARINGS		MAXIMUM WEIGHT
	E	2F	H	BA	N–W	V	U	R	S	ES	LS	OS	
404TS	8.00	12.25	0.81	6.62	4.25	4.00	2.125	1.845	0.500	2.75	6313C3	6313C3	1050 lbs.
404T	8.00	12.25	0.81	6.62	7.25	7.00	2.875	2.450	0.750	5.62	6317C3	6313C3	1050 lbs.

NOTES:
1. DIMENSION V REPRESENTS LENGTH OF STRAIGHT PART OF SHAFT
2. MAIN CONDUIT BOX MAY BE ROTATED IN 90° INCREMENTS
3. KEY DIMENSIONS EQUAL S x S x 5.62 FOR T AND S x S x 2.75 FOR TS (MOTOR SUPPLIED WITH KEY)
4. MOTOR WEIGHT SHOWN IS MAXIMUM HORSEPOWER IN FRAME
5. OPPOSITE ROTATION AVAILABLE ONLY BY CONNECTION CHANGE

CUSTOMER: _____ MOTOR MODEL NO.: _____

P.O. NO.: _____ HP: _____ VOLTAGE: _____ RPM(SYN.): _____ Hz: _____

FRAME SIZE: _____ PRODUCT TYPE: ODP EQP III, EPACT, & HIGH EFFICIENCY

COMMENTS: _____

PER: _____ DATE: _____

TAG NO's.:

- [x] STANDARD (NO AUX. BOXES)
- [ ] RTD AUX. BOX
- [ ] SPACE HEATER AUX. BOX
- [ ] BEARING RTD's

TOSHIBA RESERVES THE RIGHT TO MAKE CHANGES OF TECHNICAL IMPROVEMENT AND THE DATA MAY CHANGE WITHOUT NOTICE [x] PRELIMINARY

DO NOT USE FOR CONSTRUCTION, INSTALLATION, OR APPLICATION PURPOSES UNLESS THE DRAWING IS MARKED AS CERTIFIED [ ] CERTIFIED

TOSHIBA

TOSHIBA INTERNATIONAL CORPORATION

OPEN DRIP–PROOF
HORIZONTAL FOOT–MOUNTED
3 PHASE INDUCTION MOTOR
F1 ASSEMBLY

XT SERIES

VISIT OUR WEBSITE AT:
www.toshiba.com/ind

MDSL0051–08A R05

Issued Date	4/23/2015	Transmit #	
Issued By	dschoeck	Issued Rev	

TOSHIBA
Leading Innovation >>>

TYPICAL MOTOR PERFORMANCE DATA

Model: B1254VLF3OSH

HP	kW	Pole	FL RPM	Frame	Voltage	Hz	Phase	FL Amps
125	90	4	1775	405T	575	60	3	112
Enclosure	**IP**	**Ins. Class**	**S.F.**	**Duty**	**NEMA Nom. Eff.**	**NEMA Design**	**kVA Code**	**Ambient (°C)**
ODP	12	F	1.15	CONT	95.4	B	G	40 C

Load	HP	kW	Amperes	Efficiency (%)	Power Factor (%)
Full Load	125	93.2	111.7	95.5	87.8
¾ Load	93.75	69.9	85.7	95.9	86.3
½ Load	62.50	46.6	61.2	95.8	81.4
¼ Load	31.25	23.3	40.4	91.2	63.5
No Load			27.6		3.6
Locked Rotor			726.00		45.3

Torque				Rotor wk² Inertia
Full Load (lb-ft)	Locked Rotor (% FLT)	Pull Up (% FLT)	Break Down (% FLT)	(lb-ft²)
370	235	160	260	37.03

Safe Stall Time(s)		Sound Pressure dB(A) @ 1M	Bearings*		Approx. Motor Weight (lbs)
Cold	Hot		DE	NDE	
18	8	-	6317C3	6313C3	

*Bearings are the only recommended spare part(s).

Motor Options:
Product Family:EQPIII ODP
Mounting:Footed,Shaft:T Shaft

Customer	
Customer PO	
Sales Order	
Project #	

Tag:

All characteristics are average expected values.

TOSHIBA INTERNATIONAL CORPORATION · HOUSTON, TEXAS U.S.A.

Engineering	aacosta	Doc. Written By	D. Suarez	Doc.# / Rev	MPCF-1119 / 0
Engr. Date	5/22/2012	Doc. Approved By	M. Campbell	Doc. Issued	6/8/2011

Issued Date	4/23/2015	Transmit #	
Issued By	dschoeck	Issued Rev	

TOSHIBA
Leading Innovation >>>

SPEED TORQUE/CURRENT CURVE

Model: B1254VLF3OSH

HP	kW	Pole	FL RPM	Frame	Voltage	Hz	Phase	FL Amps
125	90	4	1775	405T	575	60	3	112
Enclosure	**IP**	**Ins. Class**	**S.F.**	**Duty**	**NEMA Nom. Eff.**	**NEMA Design**	**kVA Code**	**Ambient (°C)**
ODP	12	F	1.15	CONT	95.4	B	G	40 C

Locked Rotor Amps	Rotor wk² Inertia (lb-ft²)	Torque			
		Full Load (lb-ft)	Locked Rotor (%)	Pull Up (%)	Break Down (%)
726.00	37.03	370	235	160	260

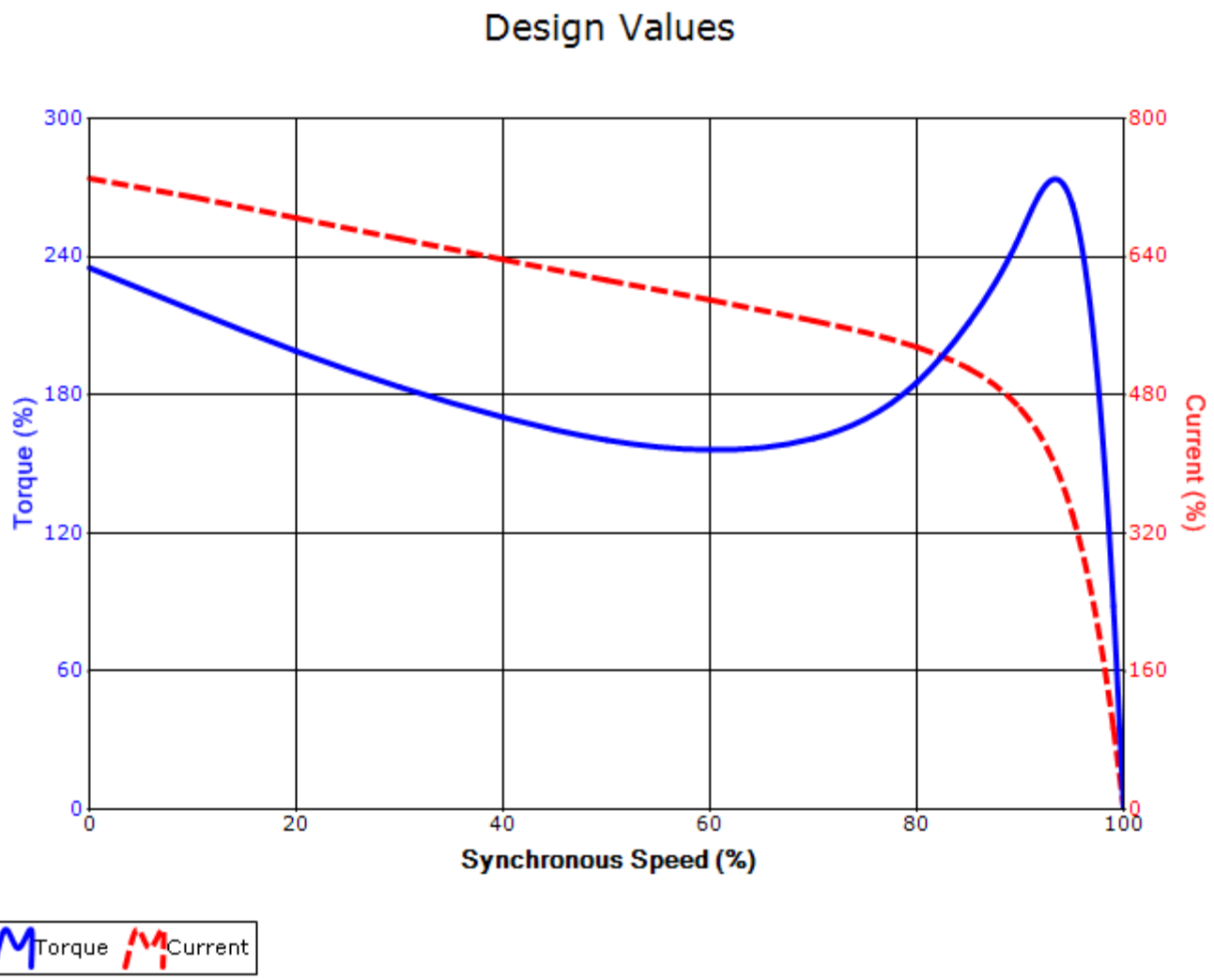

Customer			**wk² Load Inertia (lb-ft²)**	-
Customer PO			**Load Type**	-
Sales Order			**Voltage (%)**	100
Project #			**Accel. Time**	-

Tag:

All characteristics are average expected values.

TOSHIBA INTERNATIONAL CORPORATION · HOUSTON, TEXAS U.S.A.

Engineering	aacosta	**Doc. Written By**	D. Suarez	**Doc.# / Rev**	MPCF-1121 / 0
Engr. Date	5/22/2012	**Doc. Approved By**	M. Campbell	**Doc. Issued**	6/8/2011

Motor Connection Diagrams
6 Leads

Across the Line Starting / Run - Delta:

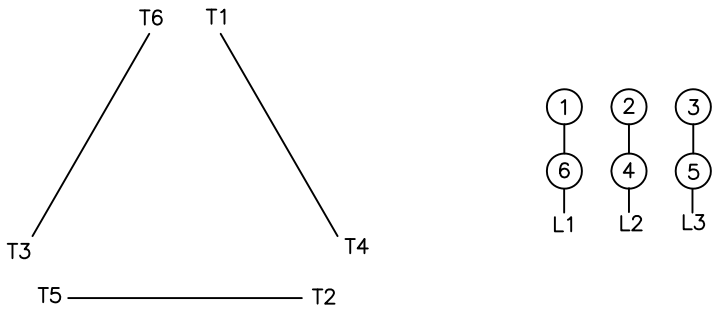

Alternate Starting Connection - Wye:

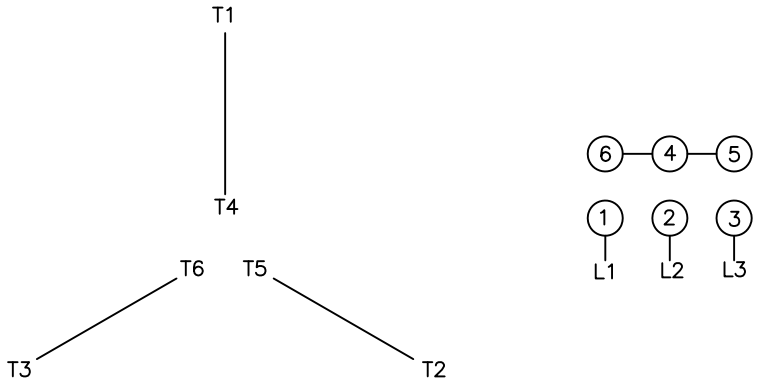

Switch L1 and L2 to reverse rotation