Uncontrolled Copy

REV	ECO	REV BY	DATE	APPD	DATE
E	0025530	J.M.RAMIREZ	04-25-2012	R.RASCON	04-25-2012

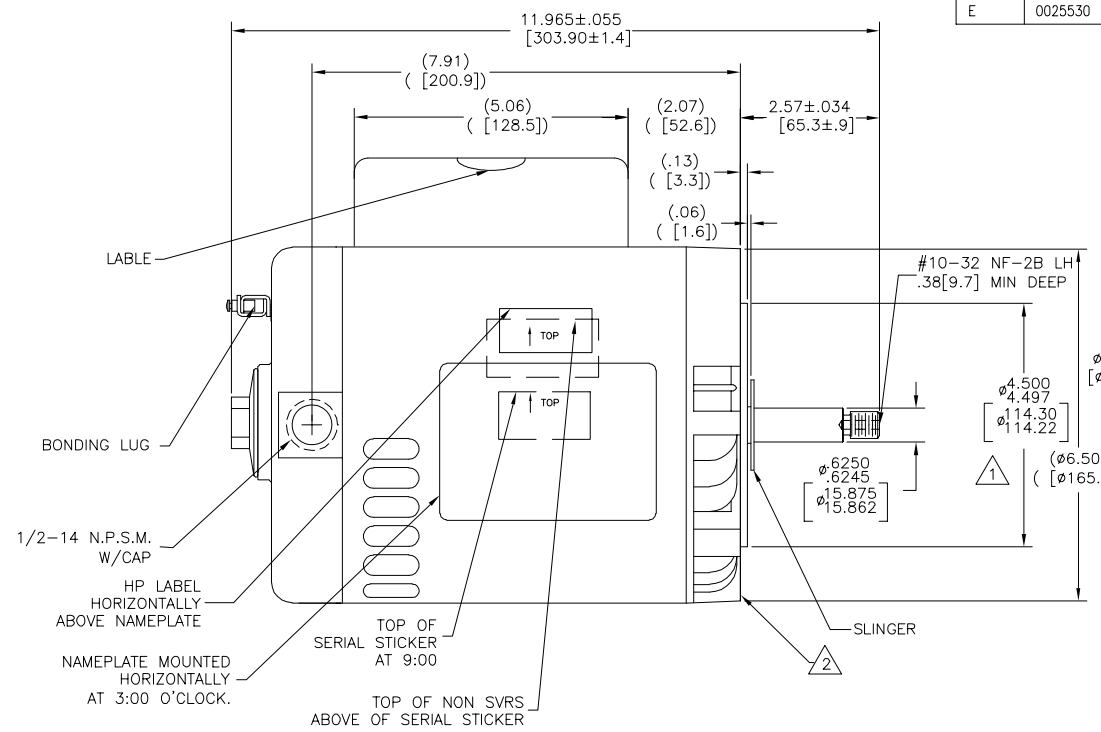

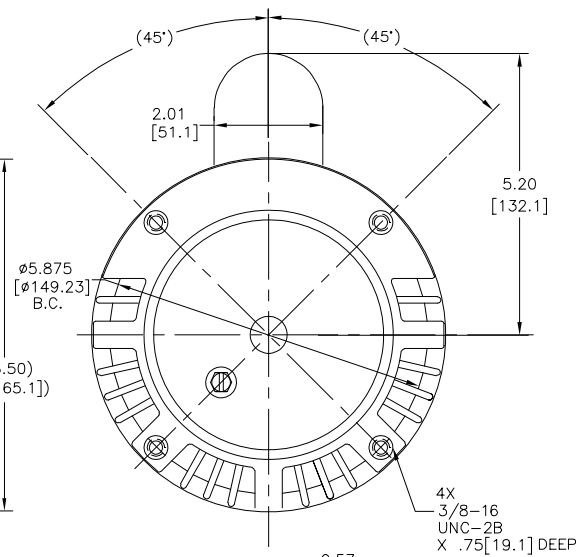

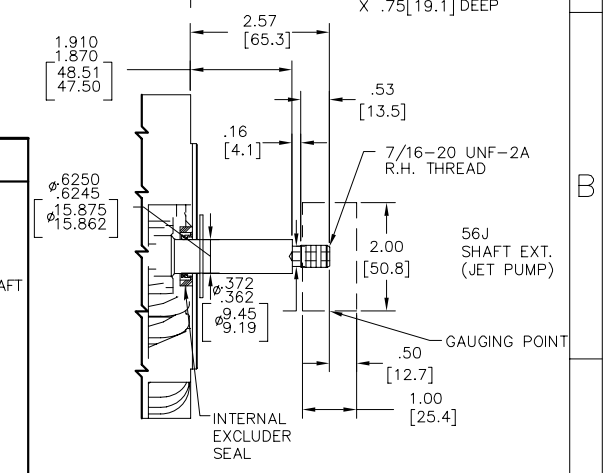

NAMEPLATE DATA

MODEL: 164302
CUST PN: B127
HP: 3/4 SF: 1.5
ROT: CCWPE
RPM: 3450
TYPE: CX CODE: J
FORM: KJM FRAME: S56J
VOLTS: 230/115
AMPS: SF 6.0/12.0
MAX AMPS: –
SF AMPS: –
PH: 1 HZ: 60
INS: B AMB: 50°C
DUTY: CONT
ENCLOSURE: ODP
THERMALLY PROTECTED

EXTERNAL CONNECTION DIAGRAM

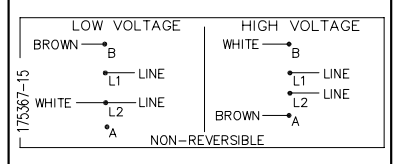

NOTES

1. PILOT DIAMETER IS CONCENTRIC WITH SHAFT CENTERLINE WITHIN .004[.10] T.I.R.
2. FACE OF MOUNTING FLANGE IS PERPENDICULAR TO SHAFT CENTERLINE WITHIN .004[.10] T.I.R.
3. SHAFT RUNOUT NOT TO EXCEED .002[.05] T.I.R
4. END PLAY NOT TO EXCEED .010[.25] MEASURED WITH NO THRUST

PERFORMANCE CURVE		APPROVED SAMPLE	
16345111		–	
UL COMPONENT		CSA	
FILE#	CCN#	FILE#	GUIDE#
E14663	XZWR2	LR4642	4211-01
CUSTOMER	DISTRIBUTION		

GEOMETRIC CHARACTERISTICS & SYMBOLS
- FLATNESS
- STRAIGHTNESS
- ANGULARITY
- PERPENDICULARITY (SQUARENESS)
- PARALLELISM
- ROUNDNESS (CIRCULARITY)
- CYLINDRICITY
- PROFILE OF ANY SURFACE
- PROFILE OF ANY LINE
- RUNOUT
- TRUE POSITION
- CONCENTRICITY
- SYMMETRY

ASME Y14.5M 1994

UNLESS OTHERWISE SPECIFIED
DIM. TOLERANCES ARE AS FOLLOWS:
X XX XXX XXXX
INCH ±.1 ±.02 ±.005 ±.0005
mm ±0.5 ±0.13 ±0.013
ANG. ±.50 DEG
REMOVE BURRS & BREAK SHARP EDGES:
INCH .003-.015 mm 0.1-0.4
CORNER FILLETS TO:
INCH .020 mm 0.5
MACHINE SURFACES:
INCH 125 mm 3.2
METRIC DIMS. SHOWN IN [BRACKETS]

DR BY: PZ	09-08-2010
APPD: SARA.H	09-08-2010
THIRD ANGLE PROJECTION	EDS DATE 11-11-2011
	FORMAT REV G

CONFIDENTIAL: THIS DRAWING AND ITS INFORMATION ARE THE EXCLUSIVE AND CONFIDENTIAL PROPERTY OF REGAL-BELOIT CORPORATION AND ARE NOT TO BE DISCLOSED, DUPLICATED, DISTRIBUTED OR OTHERWISE USED WITHOUT THE WRITTEN CONSENT OF REGAL-BELOIT CORPORATION. -ALL RIGHTS RESERVED.

REGAL-BELOIT CORPORATION

DESCRIPTION
MODEL-CFHP-56FR
OUTLINE

SIZE	DWG NO	
C	B127	
SCALE NONE		SHEET 1

Uncontrolled Copy

REVISION:	ECO	REVISADO POR:	FECHA:	APROBADO POR:	FECHA:
E	0025530	J.M.RAMIREZ	04-25-2012	R.RASCON	04-25-2012

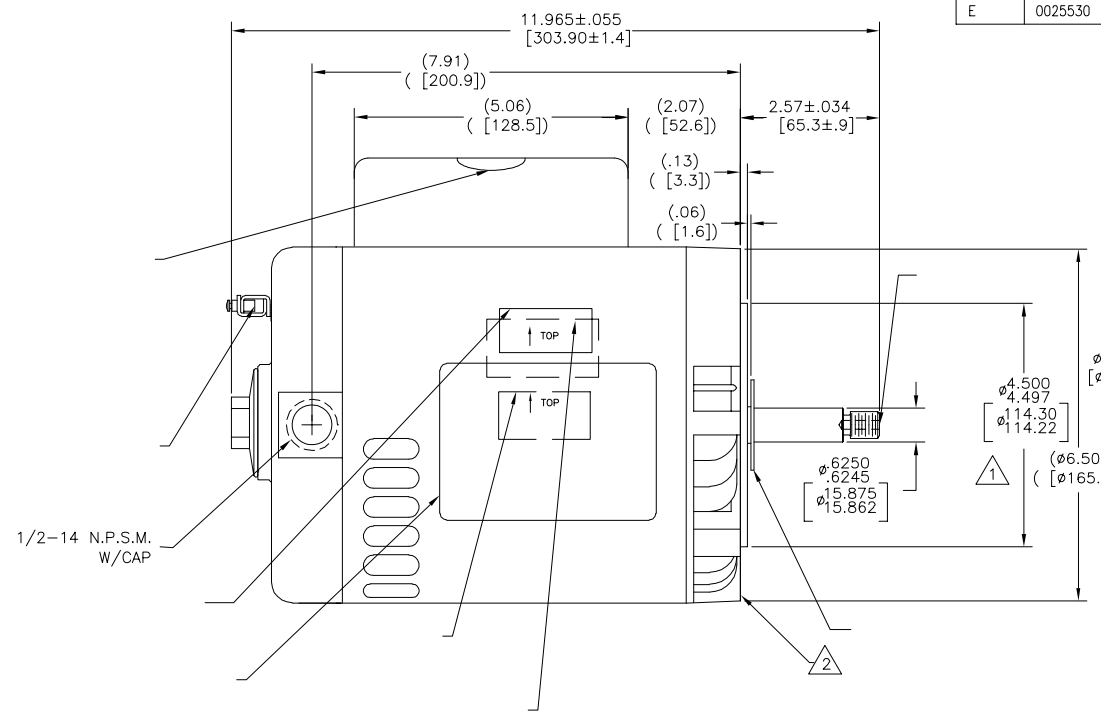

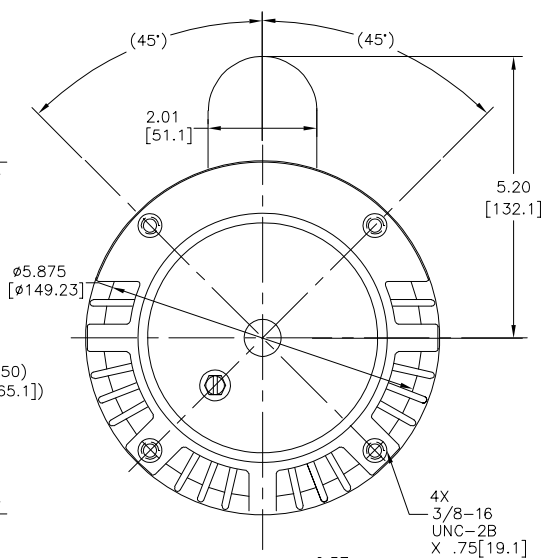

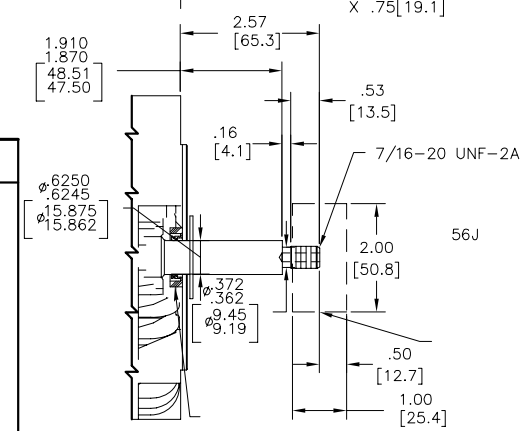

NAMEPLATE DATA	EXTERNAL CONNECTION DIAGRAM	NOTES
MODEL: 164302 CUST PN: B127 HP: 3/4 SF: 1.5 ROT: CCWPE RPM: 3450 TYPE: CX CODE: J FORM: KJM FRAME: S56J VOLTS: 230/115 AMPS: SF 6.0/12.0 MAX AMPS: – SF AMPS: – PH: 1 HZ: 60 INS: B AMB: 50°C DUTY: CONT ENCLOSURE: ODP THERMALLY PROTECTED	LOW VOLTAGE: BROWN → B; L1 LINE; WHITE → L2 LINE; A HIGH VOLTAGE: WHITE → B; L1 LINE; L2 LINE; BROWN → A 175367-15 NON-REVERSIBLE	

PERFORMANCE CURVE		APPROVED SAMPLE	
16345111		–	
UL COMPONENT		CSA	
FILE#	CCN#	FILE#	GUIDE#
E14663	XZWR2	LR4642	4211-01
CUSTOMER	DISTRIBUTION		

CARACTERISTICAS DE GEOMETRIA Y SIMBOLOS
- ▱ PLANICIDAD
- — RECTITUD
- ∠ ANGULARIDAD
- ⊥ PERPENDICULARIDAD (A ESCUADRA)
- // PARALELISMO
- ○ REDONDEZ (CIRCULARIDAD)
- ⌭ CILINDRICIDAD
- ⌓ PERFIL DE CUALQUIER SUPERFICIE
- ⌒ PERFIL DE CUALQUIER LINEA
- ↗ VARIACION
- ⌖ POSICION REAL
- ◎ CONCENTRICIDAD
- ⌯ SIMETRIA

ASME Y14.5M 1994

A MENOS QUE SE ESPECIFIQUE DE OTRA MANERA, LAS TOLERANCIAS DE LAS DIMS. SON LAS SIGUIENTES:

	X	XX	XXX	XXXX
PULG	±.1	±.02	±.005	±.0005
mm	±0.5	±0.13	±0.013	

ANG. ±.50 GRADOS
ELIMINAR REBABAS Y ORILLAS FILOSAS DEL BORDE.
PULG .003–.015 mm 0.1–0.4
FILETEAR ESQUINA: PULG .020 mm 0.5
MAQUINAR SUPERFICIES
PULG 125 mm 3.2
DIMS METRICAS MOSTRADAS [PARENTESIS]

DIBUJADO POR: PZ	09-08-2010	
APROBADO POR: SARA.H	09-08-2010	
TERCER ANGULO DE PROYECCION	FECHA EDS: 11-11-2011	REV. FORMATO: G

CONFIDENCIAL: ESTE DIBUJO Y SU INFORMACION SON PROPIEDAD DE USO EXCLUSIVO Y CONFIDENCIAL DE REGAL-BELOIT CORPORATION. Y NO DEBERAN SER REVELADOS, DUPLICADOS, DISTRIBUIDOS O USARSE DE OTRA MANERA SIN EL CONSENTIMIENTO ESCRITO DE REGAL-BELOIT CORPORATION. -TODOS LOS DERECHOS RESERVADOS.

REGAL-BELOIT CORPORATION

DESCRIPCION: MODEL-CFHP-56FR OUTLINE

TAMAÑO: C | NUMERO DE DIBUJO: B127

ESCALA: NONE | HOJA: 1

Uncontrolled Copy

版本	ECO	编制	日期	批准	日期
E	0025530	J.M.RAMIREZ	04-25-2012	R.RASCON	04-25-2012

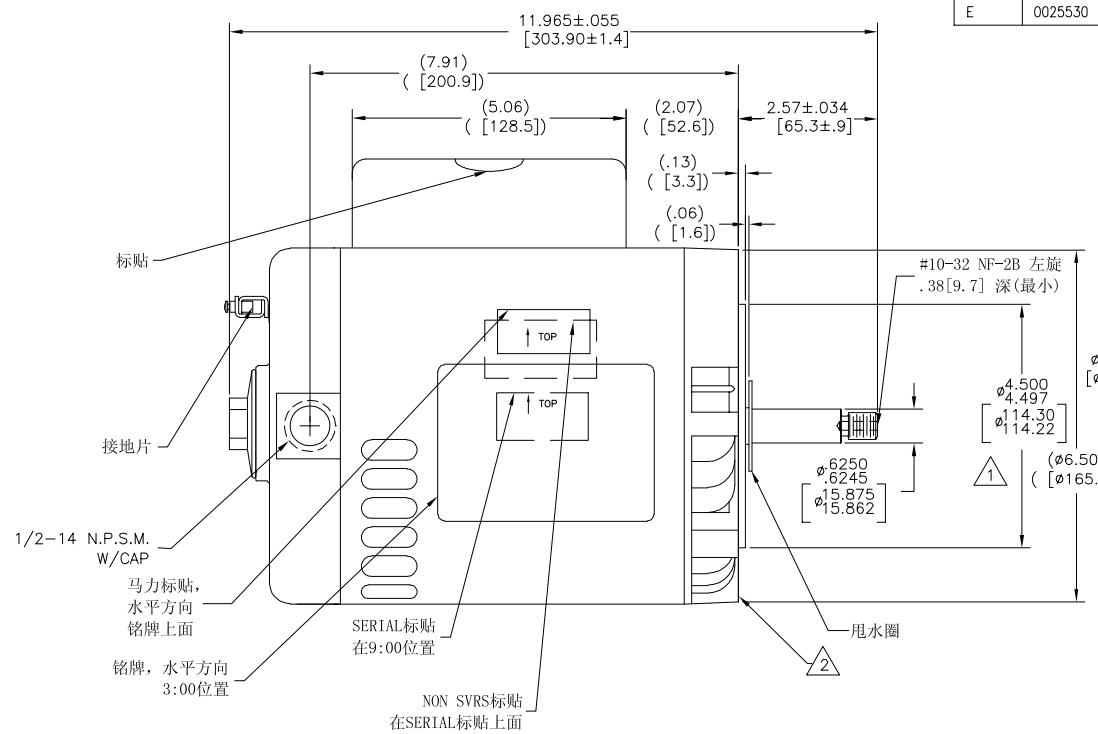

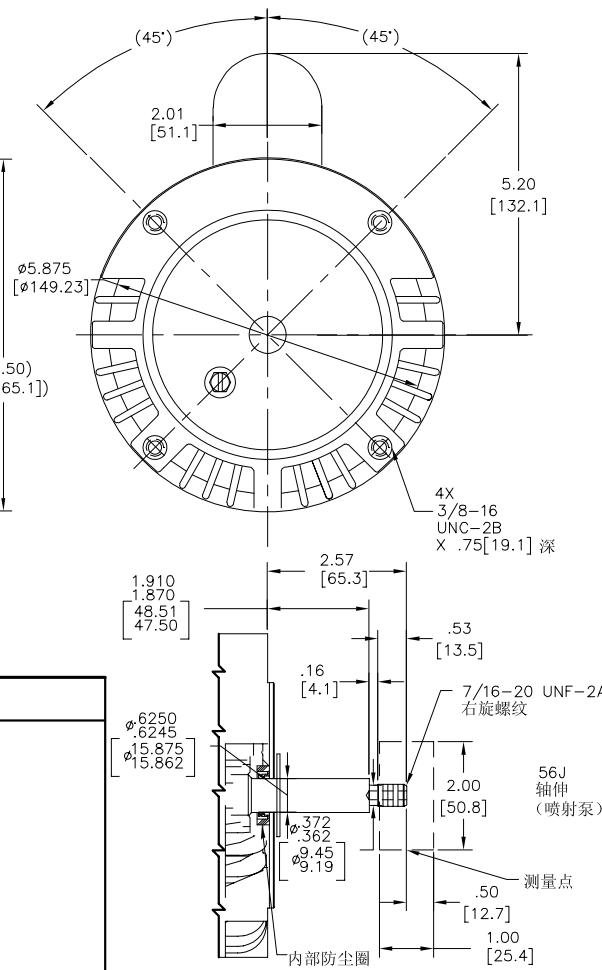

NAMEPLATE DATA

MODEL: 164302
CUST PN: B127
HP: 3/4 SF: 1.5
ROT: CCWPE
RPM: 3450
TYPE: CX CODE: J
FORM: KJM FRAME: S56J
VOLTS: 230/115
AMPS: SF 6.0/12.0
MAX AMPS: –
SF AMPS: –
PH: 1 HZ: 60
INS: B AMB: 50°C
DUTY: CONT
ENCLOSURE: ODP
THERMALLY PROTECTED

EXTERNAL CONNECTION DIAGRAM

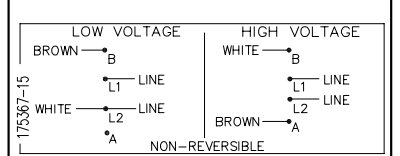

NOTES

1. 止口直径与轴中心的同心度为.004[.10]
2. 法兰安装端面和轴中心的垂直度为.004[.10]
3. 轴跳动不超过.002[.05]
4. 轴向窜动不超过.010[.25]

PERFORMANCE CURVE		APPROVED SAMPLE	
16345111		–	
UL COMPONENT		CSA	
FILE#	CCN#	FILE#	GUIDE#
E14663	XZWR2	LR4642	4211-01
CUSTOMER	DISTRIBUTION		

形位公差
平面度
直线度
倾斜度
垂直度
平行度
圆度
圆柱度
面轮廓度
线轮廓度
圆跳动
位置度
同轴度
对称度

ASME Y14.5M 1994

除另有注明
尺寸公差如下：

	X	XX	XXX	XXXX
英寸	±.1	±.02	±.005	±.0005
毫米	±0.5	±0.13	±0.013	

角度 ±.50 度
清理毛刺和尖棱
英寸 .003-.015 毫米 0.1-0.4
内圆角
英寸 .020 毫米 0.5
表面粗糙度
英制 125 米制 3.2
米制尺寸显示在[ ]

绘图:	PZ	09-08-2010
批准:	SARA.H	09-08-2010
第三角投影	图纸格式发布日期	11-11-2011
	图纸格式版本	G

机密：本图纸及相关信息所有权归REGAL-BELOIT CORPORATION。未经REGAL-BELOIT CORPORATION书面授权，不得泄露、复制、传播或作其他用途。—版权所有

REGAL-BELOIT CORPORATION

名称 MODEL-CFHP-56FR OUTLINE

图幅	图号	
C	B127	
比例 NONE		页号 1