Uncontrolled Copy

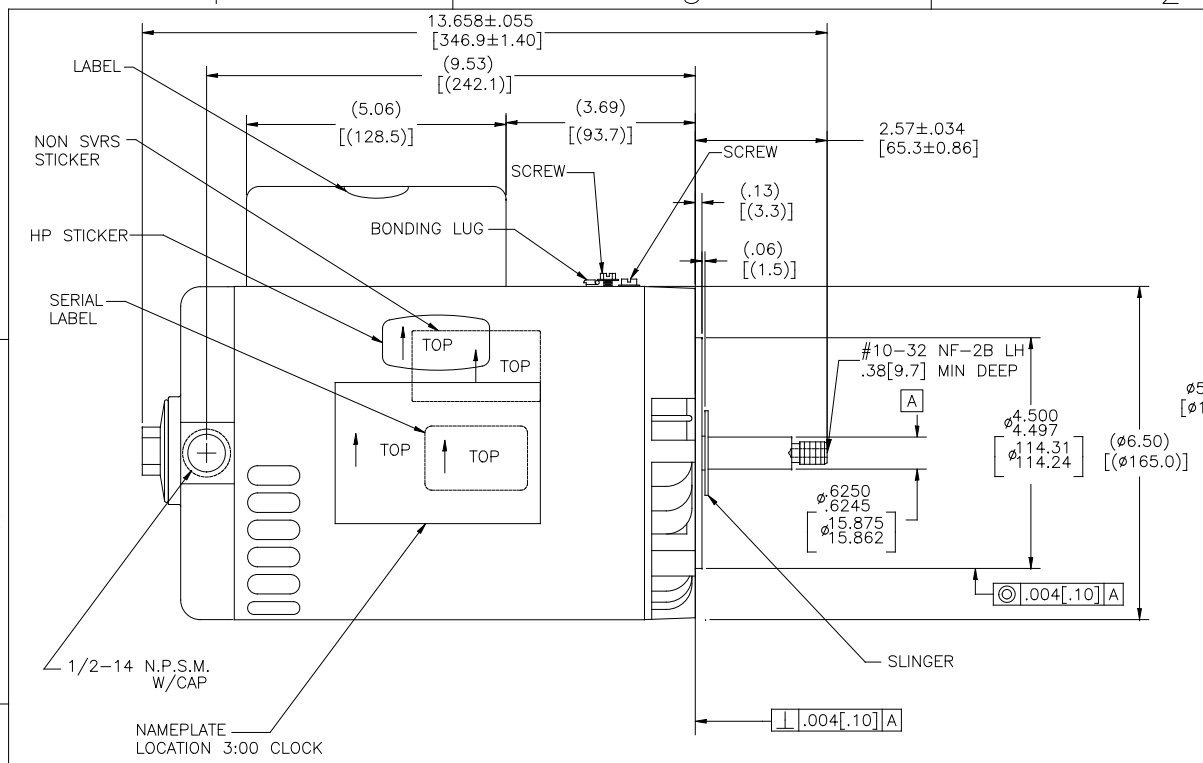

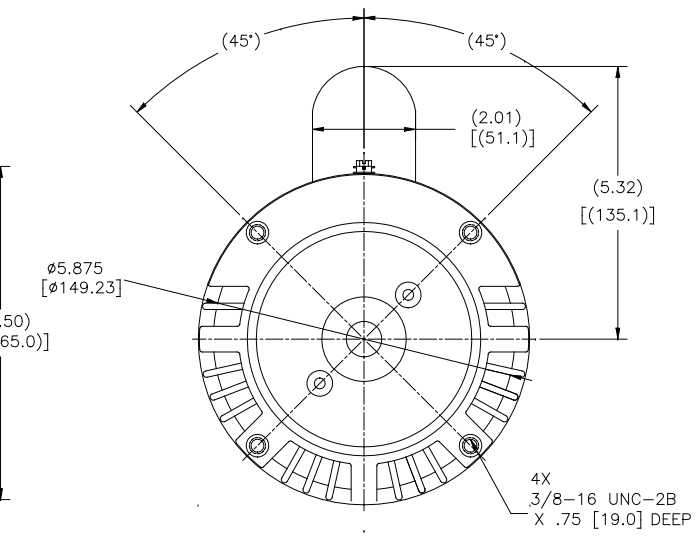

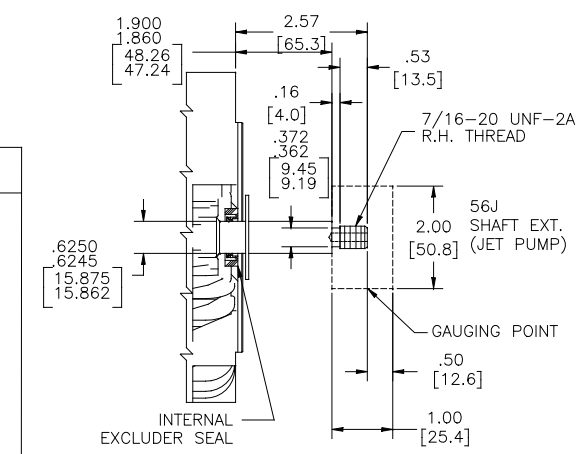

NAMEPLATE DATA

MODEL: 164304
CUST PN: B129
HP: 1.5 SF: 1.30
ROT: CCWPE
RPM: 3450
TYPE: CX CODE: H
FORM: – FRAME: P 56 J
VOLTS: 230/115
AMPS: SF 9.2/18.4
MAX AMPS: –
SF AMPS: –
PH: 1 HZ: 60
INS: B AMB: 50°C
DUTY: CONT
ENCLOSURE: ODP
THERMALLY PROTECTED

EXTERNAL CONNECTION DIAGRAM

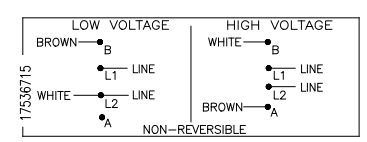

NOTES

1. SHAFT RUNOUT NOT TO EXCEED .002[.05] T.I.R..
2. END PLAY NOT TO EXCEED .010[.25] MEASURED WITH NO THRUST
3. ALL DIMENSIONS SHOWN IN PARENTHESIS ARE REFERENCE DIMENSIONS.

PERFORMANCE CURVE		APPROVED SAMPLE	
16345311		–	
UL COMPONENT		CSA	
FILE#	CCN#	FILE#	GUIDE#
E14663	XEWR2	LR4642	4211-01
CUSTOMER	DISTRIBUTION		

DRAWING REVISION	REVISION BY	DATE
K	T. REYES	03/04/2017
ECO	APPROVED BY	DATE
ECO-0121180	MEO	03/04/2017

ECO DESCRIPTION
CHG DESCRIPTION NAME FROM CFHP TO PFHP

COPYRIGHT REGAL BELOIT AMERICA, INC. ALL RIGHTS RESERVED.
PROPRIETARY AND CONFIDENTIAL INFORMATION – THIS DOCUMENT IS THE PROPERTY OF REGAL BELOIT AMERICA, INC. OR ITS SUBSIDIARIES. THIS DOCUMENT CONTAINS INFORMATION, DATA, PROGRAMS, CONFIGURATION OR OTHER FIRM INCIDENTS TO BE DEEMED BY RECEIVING IT, TO AGREE THAT IT, AND/OR ANY PART OF IT, SHALL NOT BE DISCLOSED TO ANY PERSON, CORPORATION OR OTHER ENTITY, DUPLICATED, AND/OR USED, EXCEPT AS EXPRESSLY APPROVED IN WRITING IN ADVANCE BY OWNER. THIS DOCUMENT SHALL BE RETURNED TO OWNER UPON REQUEST. IT MAY BE SUBJECT TO CERTAIN RESTRICTIONS UNDER APPLICABLE EXPORT CONTROL LAWS AND REGULATIONS.

TOLERANCES UNLESS OTHERWISE SPECIFIED

DEC.	INCH	mm	ANGLE
.X	±0.1	[±2.5]	±0.5°
.XX	±0.02	[±0.51]	
.XXX	±0.005	[±0.127]	
.XXXX	±0.0005	[±0.0127]	

REMOVE BURRS & BREAK SHARP EDGES .003/.015 [.076/.381]
CORNER FILLETS .02 [.511]
MACHINED SURFACES 125/ 3.2/
INCH/mm
mm SHOWN IN [BRACKETS]

DRAWN BY: TZ
DATE: 05-12-2009
APPROVED BY:
DATE:
REFERENCE

THIRD ANGLE PROJECTION

Regal Beloit America, Inc.

DESCRIPTION
MODEL-PFHP-56FR
OUTLINE

MATERIAL | PROCESS/FINISH

SIZE C | DWG NO B129 | SHEET 1