Uncontrolled Copy Released 5/23/2007

REV	DATE	PROJECT	DESCRIPTION	REV BY	APPD
E	09-27-2005		DISCONTINUED 03	krldou	mguerr

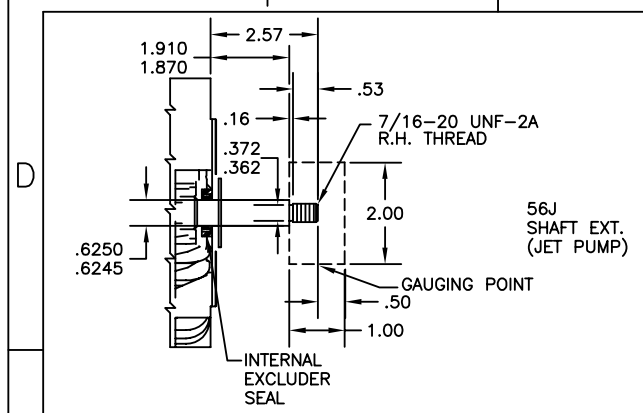

ALL DIMENSIONS SHOWN IN PARENTHESIS ARE REFERENCE DIMENSIONS. ALL OTHER DIMENSIONS ARE TOLERANCED PER THE FOLLOWING CHART UNLESS OTHERWISE SPECIFIED.

"C" DIM.	= +/-	.055
SHAFT EXT.	= +/-	.034
LEAD LENGTHS	= +/-	1.00
EXTENDED THRU-BOLTS	= +/-	.050
ANGULAR DIMS.	= +/-	2 DEGS.

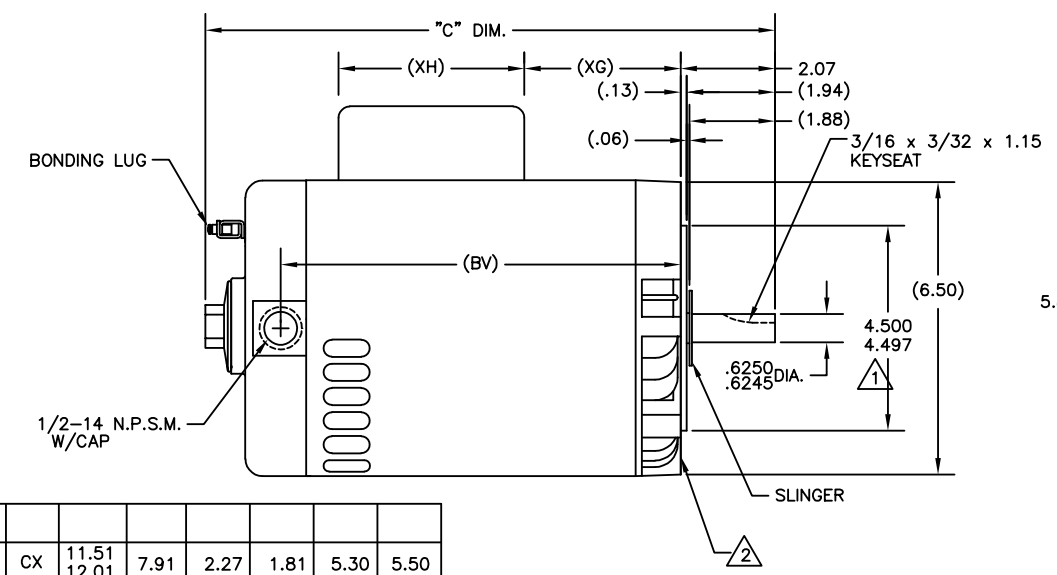

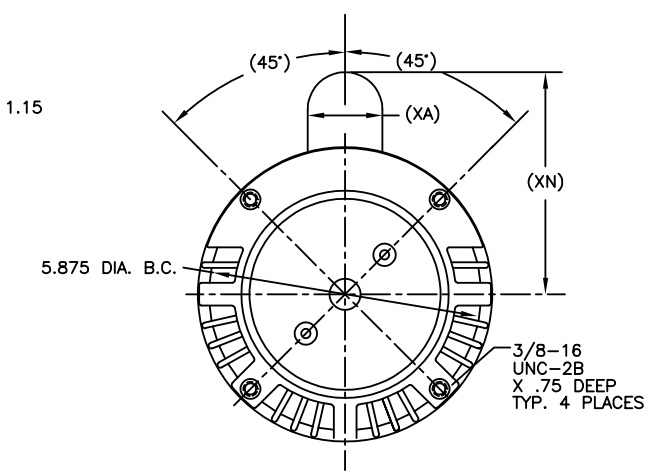

09	S56C S56J	CX	11.51 12.01	7.91	2.27	1.81	5.30	5.50
08	L56C L56J	CX	11.39 11.89	7.78	2.01	1.94	5.06	5.20
07	Y56C Y56J	CX	13.65 14.15	10.03	2.27	4.20	5.30	5.50
06	Y56C Y56J	CX	13.65 14.15	10.03	2.27	3.94	5.30	5.50
05	U56C U56J	CX	12.15 12.65	8.53	2.27	2.44	5.30	5.50
04	S56C S56J	CX	11.51 12.01	7.91	2.01	2.07	5.06	5.20
03	P56C P56J	CX	13.15 13.55	9.53	2.01	3.69	5.06	5.20
02	X56C X56J	CX	12.55 13.15	9.03	2.01	3.19	5.06	5.20
01	M56C M56J	CX	11.89 12.39	8.28	2.01	2.44	5.06	5.20
GRP	FRAME	TYPE	"C"	'BV'	'XA'	'XG'	'XH'	'XN'

NOTES:

1. PILOT DIAMETER IS CONCENTRIC WITH SHAFT CENTERLINE WITHIN .004 T.I.R.
2. FACE OF MOUNTING FLANGE IS PERPENDICULAR TO SHAFT CENTERLINE WITHIN .004 T.I.R.
3. SHAFT RUNOUT NOT TO EXCEED .002 T.I.R.
4. END PLAY NOT TO EXCEED .010 MEASURED WITH NO THRUST

C-CODE:
CLASS:

UNLESS OTHERWISE SPECIFIED
DIM ARE IN INCHES
X = ± .1
XX = ± .02
XXX = ± .005
XXXX = ± .0005
ANG = ± .5

CONFIDENTIAL:THIS DRAWING AND ITS INFORMATION ARE THE EXCLUSIVE AND CONFIDENTIAL PROPERTY OF A.O. SMITH CORP. AND ARE NOT TO BE DISCLOSED, DUPLICATED,DISTRIBUTED OR OTHERWISE USED WITHOUT THE WRITTEN CONSENT OF A.O. SMITH CORP. -ALL RIGHTS RESERVED.

DR BY:		
CK BY:	09-01-2003	
APPD:		
ISS:		

THIRD ANGLE PROJECTION

AUTOCAD FORM 3

A.O.SMITH ELECTRICAL PRODUCTS COMPANY TIPP CITY, OHIO — A DIVISION OF A. O. SMITH CORPORATION

COPYRIGHT 1995

TITLE: 0056 DWG OUTLINE BB

SIZE: C | DWG NO: 189505 | REV: E

SCALE: 1=1 | SHEET 1 OF 1